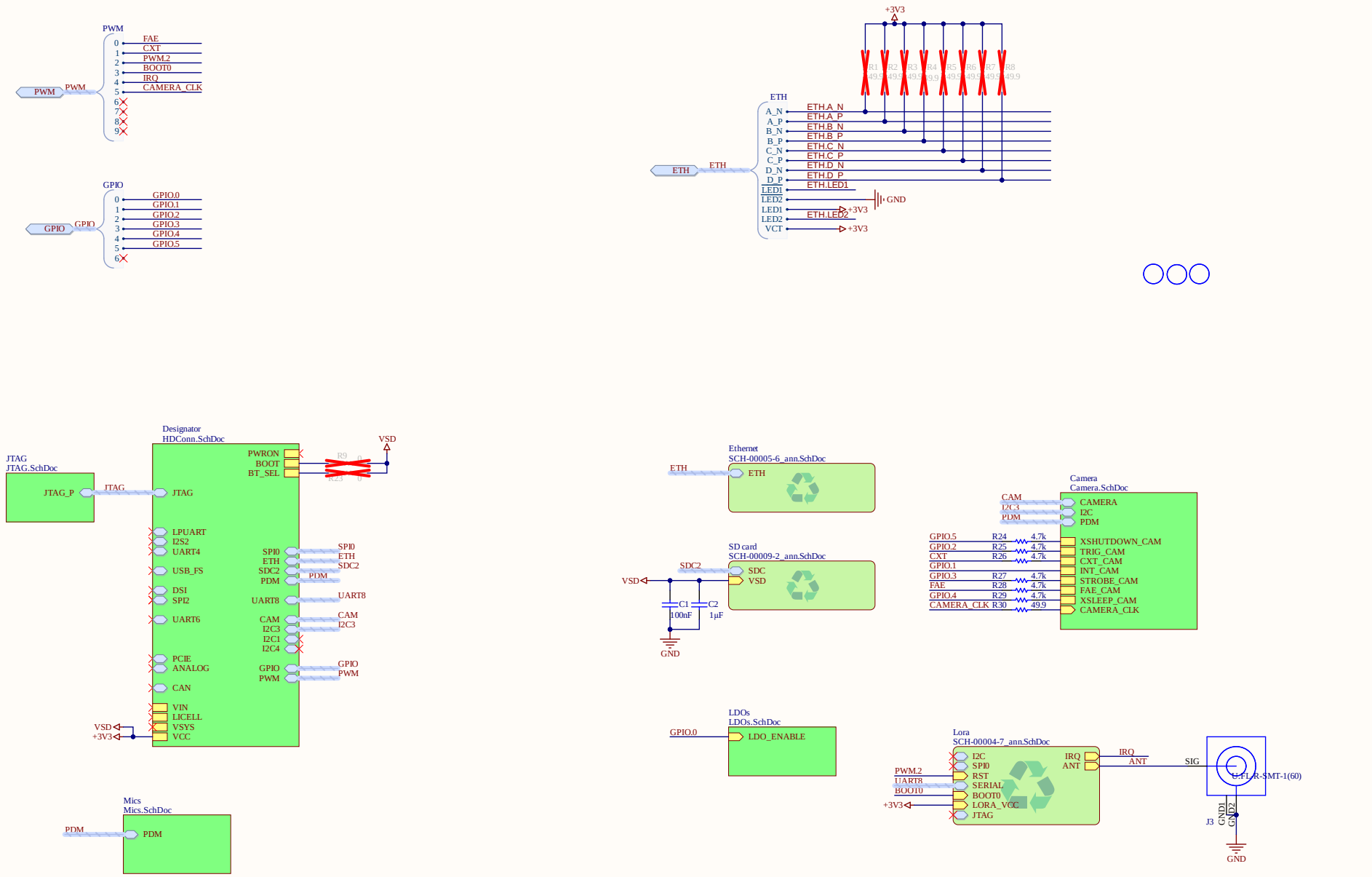

Reference Designs ARE PROVIDED "AS IS" AND "WITH ALL FAULTS. Arduino SA DISCLAIMS ALL OTHER WARRANTIES, EXPRESS OR IMPLIED, REGARDING PRODUCTS, INCLUDING BUT NOT LIMITED TO, ANY IMPLIED WARRANTIES OF MERCHANTABILITY OR FITNESS FOR A PARTICULAR PURPOSE.
Arduino SA may make changes to specifications and product descriptions at any time, without notice. The Customer must not rely on the absence or characteristics of any features or instructions marked "reserved" or "undefined".
Arduino SA reserves these for future definition and shall have no responsibility whatsoever for conflicts or incompatibilities arising from future changes to them. The product information on the Web Site or Materials is subject to change without notice.
Do not finalize a design with this info. ARDUINO and other Arduino brands and logos and Trademarks of Arduino SA. All Arduino SA Trademarks cannot be used without owner's formal permission.

Title	Portenta Vision Shield		
ID:	SL-ASX00026	Revision:	4.0
Date: 1/26/2021	Time: 4:36:05 PM	Sheet 1 of 9	
File:	TOPView.SchDoc	Author: Francesca Cenna	Rev author *

CC BY SA

ARDUINO

HM01B0 (F view)

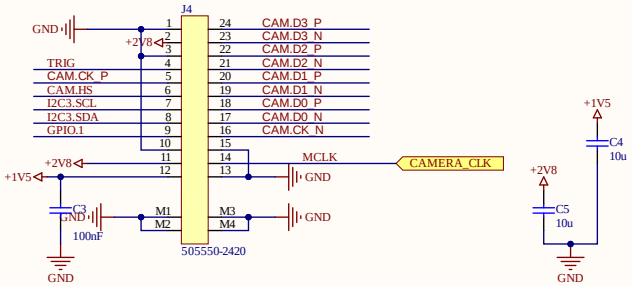

HM01B0 Pinout

Pin no.	Pin name	Type	Description
1	AGND	Ground	Analog ground.
2	AVDD28	Power	Analog power. **(2.8V)**
3	DGND	Ground	Digital ground.
4	TRIG	In	Frame trigger input. **(Internal pull down / Active high)**
5	FLVD	Out	Frame valid output.
6	LVLD	Out	Line valid output.
7	SCL	In	I2C serial clock.
8	SDA	In/Out	Serial data I/O. **(Open drain)**
9	INT	Out	Interrupt output. **(Active high)**
10	DGND	Ground	Digital ground.
11	IOVDD18	Power	IO power. **(1.8V)**
12	DVDD15	Power	Core digital power. **(1.5V)**
13	DGND	Ground	Digital ground.
14	MCLK	In	Master clock input.
15	DGND	Ground	Digital ground.
16	PCLK	Out	Pixel clock.
17	D0	Out	Data 0 output.
18	D1	Out	Data 1 output.
19	D2	Out	Data 2 output.
20	D3	Out	Data 3 output.
21	D4	Out	Data 4 output.
22	D5	Out	Data 5 output.
23	D6	Out	Data 6 output.
24	D7	Out	Data 7 output.

Note: (1) HM01B0 sensor default slave address: 0x24.

Table 2.1: Pin map and description of camera module

FPC-20

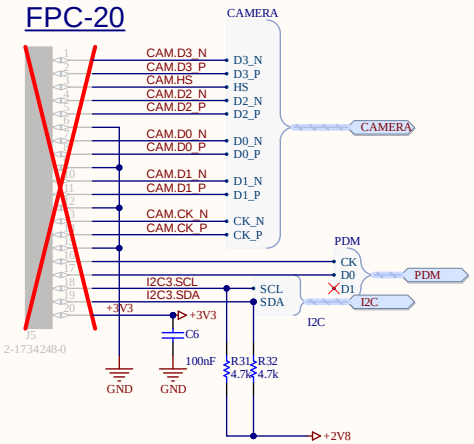

FPC-15

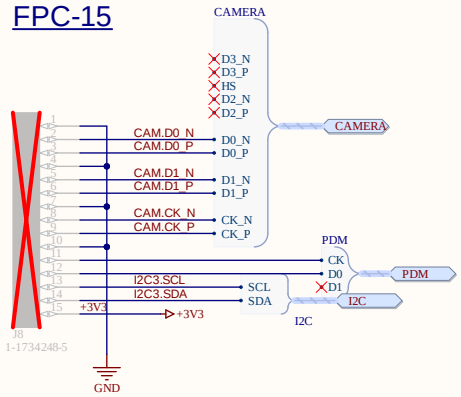

HM0360 Pinout

Pin no.	Pin name	Type	Description
1	AVDD	Power	Analog power. **(2.8V)**
2	GND	Ground	Ground.
3	D7	Out	Data 7 output.
4	D6	Out	Data 6 output.
5	D5	Out	Data 5 output.
6	D4	Out	Data 4 output.
7	D3	Out	Data 3 output.
8	D2	Out	Data 2 output.
9	D1	Out	Data 1 output.
10	D0	Out	Data 0 output.
11	GND	Ground	Ground.
12	IOVDD	Power	IO power. **(1.8V / 2.8V)**
13	DVDD	Power	Digital power. **(1.2V)**
14	GND	Ground	Ground.
15	MCLK	In	Master clock input. **(Connected to DGND when using internal oscillator)**
16	PLCK	Out	Pixel clock / Serial clock output.
17	CXT_SEL	In	Context switching selection. **(Internal pull low)**
18	INT	Out	Interrupt output. **(Active high)**
19	SDA	In/Out	Serial Data I/O. **(Open drain)**
20	SCL	In	I2C serial clock.
21	HVLD	Out	Line valid output.
22	FVLD	Out	Frame valid output.
23	TRIGGER	In	Frame trigger input. **(Internal pull low / Active high)**
24	GND	Ground	Ground.
25	CLK_SEL	In	Clock source select. **(Internal pull low, Low: Oscillator, High: MCLK, connect to ground for oscillator mode)**
26	RTC	In	Real time clock source input. **(Must not be left floating, connected to DGND without RTC clock input)**
27	FAE	In	Exposure meter enable pin. (Internal pull low / Active high)
28	XSHUTDOWN	In	Reset and power down control pin. **(Active low)**
29	XSLEEP	In	Low power sleep mode. **(Active low)**
30	STROBE	Out	Strobe output.

Note: (1) HM0360 sensor default slave address: 0x24.

Table 2.1: Pin map and description of camera module

HM0360 (F View)

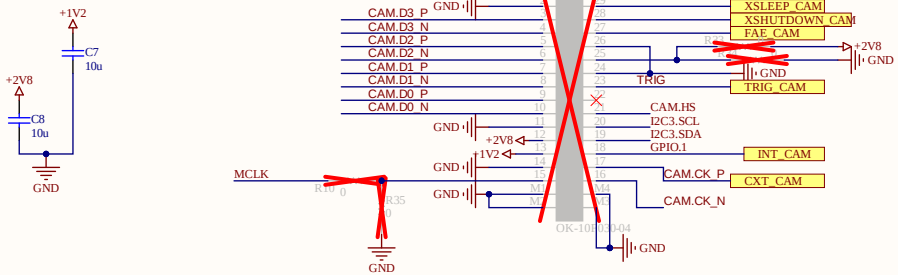

Reference Designs ARE PROVIDED "AS IS" AND "WITH ALL FAULTS. Arduino SA DISCLAIMS ALL OTHER WARRANTIES, EXPRESS OR IMPLIED, REGARDING PRODUCTS, INCLUDING BUT NOT LIMITED TO, ANY IMPLIED WARRANTIES OF MERCHANTABILITY OR FITNESS FOR A PARTICULAR PURPOSE.
Arduino SA may make changes to specifications and product descriptions at any time, without notice. The Customer must not rely on the absence or characteristics of any features or instructions marked "reserved" or "undefined".
Arduino SA reserves these for future definition and shall have no responsibility whatsoever for conflicts or incompatibilities arising from future changes to them. The product information on the Web Site or Materials is subject to change without notice.
Do not finalize a design with this info. ARDUINO and other Arduino brands and logos and Trademarks of Arduino SA. All Arduino SA Trademarks cannot be used without owner's formal permission.

Title	Portenta Vision Shield		
ID:	*.	Revision	4.0
Date: 1/26/2021	Time: 4:36:06 PM	Sheet 3 of 9	
File: Camera.SchDoc		Author Francesca Cenna	Rev author *

Huawei Technologies Co., Ltd. Confidential Do not Copy

Mics

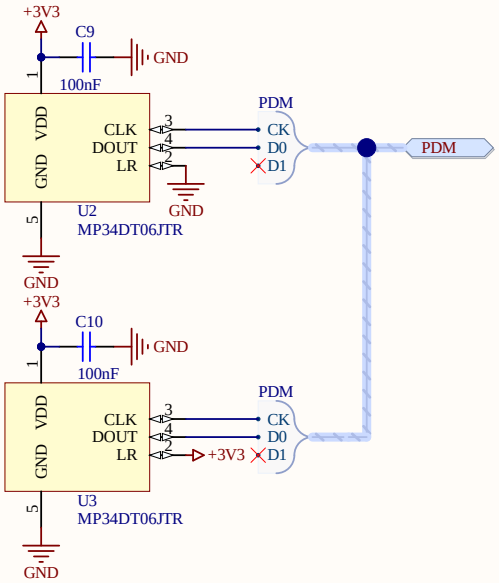

Reference Designs ARE PROVIDED "AS IS" AND "WITH ALL FAULTS. Arduino SA DISCLAIMS ALL OTHER WARRANTIES, EXPRESS OR IMPLIED, REGARDING PRODUCTS, INCLUDING BUT NOT LIMITED TO, ANY IMPLIED WARRANTIES OF MERCHANTABILITY OR FITNESS FOR A PARTICULAR PURPOSE.
Arduino SA may make changes to specifications and product descriptions at any time, without notice. The Customer must not rely on the absence or characteristics of any features or instructions marked "reserved" or "undefined". Arduino SA reserves these for future definition and shall have no responsibility whatsoever for conflicts or incompatibilities arising from future changes to them. The product information on the Web Site or Materials is subject to change without notice.
Do not finalize a design with this info. ARDUINO and other Arduino brands and logos and Trademarks of Arduino SA. All Arduino SA Trademarks cannot be used without owner's formal permission.

Title: Portenta Vision Shield			
ID: *.	Revision: 4.0		
Date: 1/26/2021 Time: 4:36:07 PM	Sheet 4 of 9		
File: Mics.SchDoc	Author: Francesca Cenna	RevAuthor: *	

BY SA

ARDUINO

LDOs

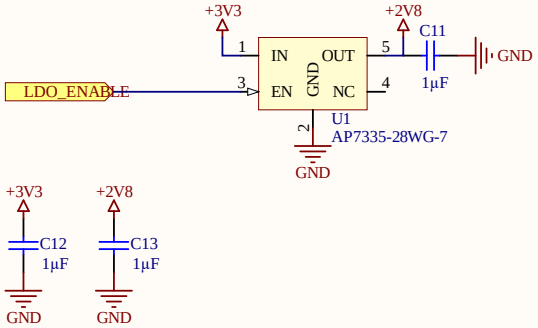

Reference Designs ARE PROVIDED "AS IS" AND "WITH ALL FAULTS. Arduino SA DISCLAIMS ALL OTHER WARRANTIES, EXPRESS OR IMPLIED, REGARDING PRODUCTS, INCLUDING BUT NOT LIMITED TO, ANY IMPLIED WARRANTIES OF MERCHANTABILITY OR FITNESS FOR A PARTICULAR PURPOSE.
Arduino SA may make changes to specifications and product descriptions at any time, without notice. The Customer must not rely on the absence or characteristics of any features or instructions marked "reserved" or "undefined". Arduino SA reserves these for future definition and shall have no responsibility whatsoever for conflicts or incompatibilities arising from future changes to them. The product information on the Web Site or Materials is subject to change without notice.
Do not finalize a design with this info. ARDUINO and other Arduino brands and logos and Trademarks of Arduino SA. All Arduino SA Trademarks cannot be used without owner's formal permission.

Title: Portenta Vision Shield			
ID: *.	Revision: 4.0		
Date: 1/26/2021 Time: 4:36:08 PM	Sheet 5 of 9		
File: LDOs.SchDoc	Author: Francesca Cenna	RevAuthor: *	

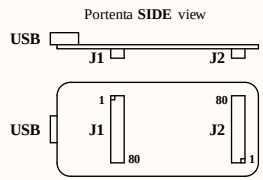

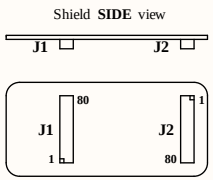

HD Connectors on the shield are mirrored

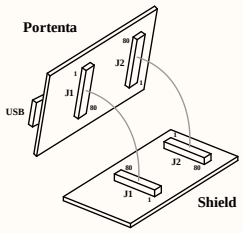

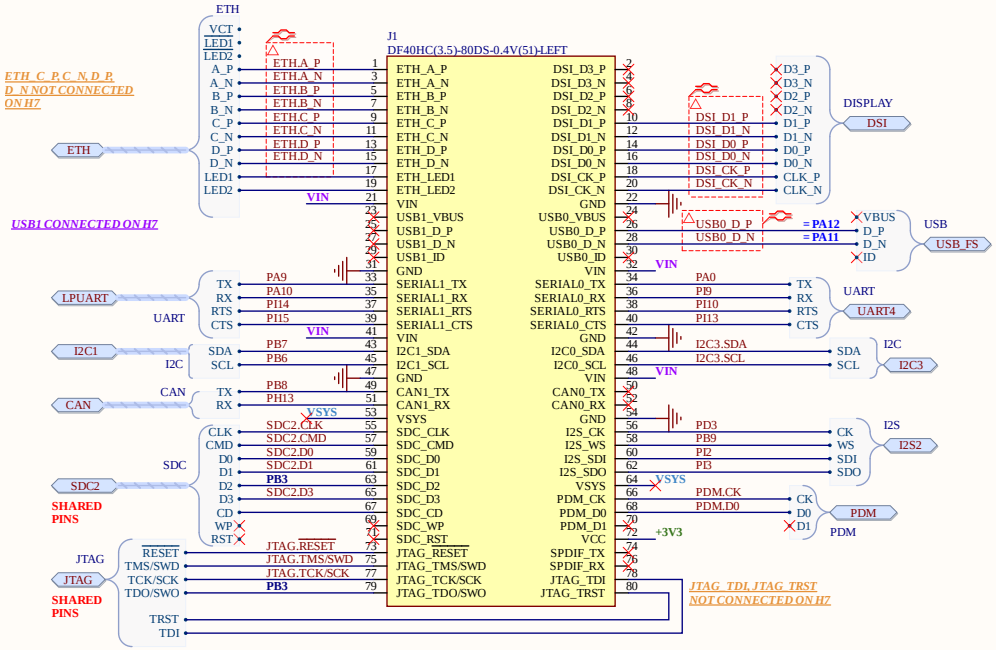

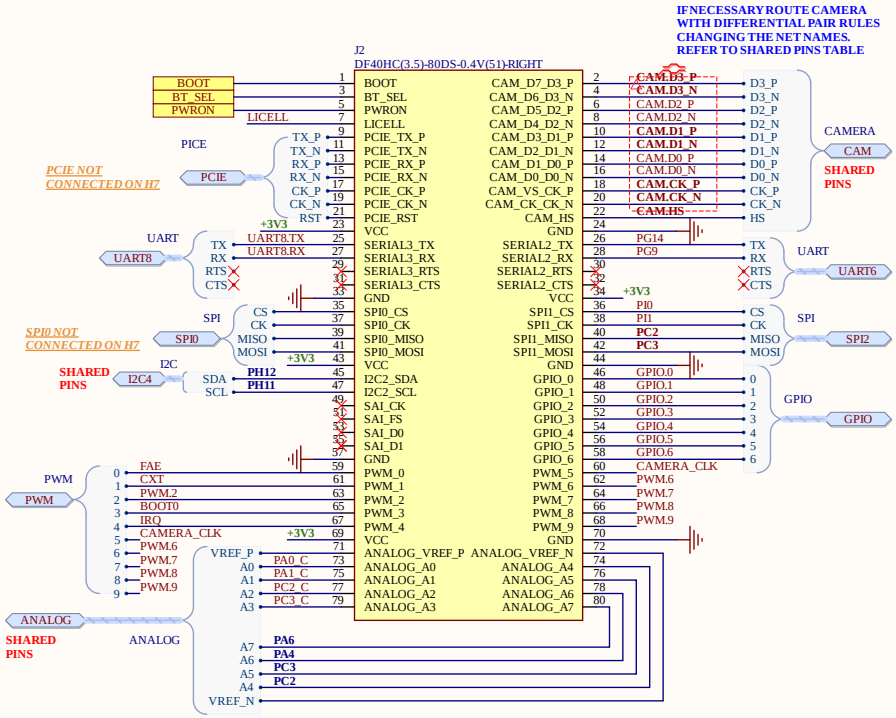

SHARED PINS TABLE

NET	BUS 1	BUS 2
PB3	JTAG	SDC2
CAM.D1_N	CAM	I2C4
CAM.D1_P	CAM	I2C4
CAM.CK_P	CAM	SAI2A
CAM.D3_N	CAM	SAI2A
CAM.D3_P	CAM	SAI2A
CAM.HS	CAM	ANALOG
CAM.CK_N	CAM	ANALOG
PC2	ANALOG	SPI2
PC3	ANALOG	SPI2

POWER NETS TABLE

NET	TYPE	RANGES	DESCRIPTION
VIN — VIN	**PORTENTA INPUT**	4.1V to 6V.	Default 3.3V, PMIC (U10) programmable output.
+3V3 — VCC	***PORTENTA OUTPUT***	1.1V to 3.3V in steps, max 1A.	Default 3.3V, PMIC (U10) programmable output.
VSYS — VSYS	***PORTENTA RESERVED OUTPUT***	**RESERVED, DO NOT USE** 3.5V to 4.2V, max 600mA.	Default 4.2V, PMIC (U10) programmable output which is also the input voltage of the bucks inside the PMIC itself.
LICELL — LICELL	**PORTENTA INPUT**	Coinc cell max 3.6V, max 46uA.	Max 4uA with PMIC (U10) in coin cell mode, max 46uA with PMIC in standby/suspend mode.

Reference Designs ARE PROVIDED "AS IS" AND "WITH ALL FAULTS. Arduino SA DISCLAIMS ALL OTHER WARRANTIES, EXPRESS OR IMPLIED, REGARDING PRODUCTS, INCLUDING BUT NOT LIMITED TO, ANY IMPLIED WARRANTIES OF MERCHANTABILITY OR FITNESS FOR A PARTICULAR PURPOSE.
Arduino SA may make changes to specifications and product descriptions at any time, without notice. The Customer must not rely on the absence or characteristics of any features or instructions marked "reserved" or "undefined".
Arduino SA reserves these for future definition and shall have no responsibility whatsoever for conflicts or incompatibilities arising from future changes to them. The product information on the Web Site or Materials is subject to change without notice.
Do not finalize a design with this info. ARDUINO and other Arduino brands and logos and Trademarks of Arduino SA. All Arduino SA Trademarks cannot be used without owner's formal permission.

Title: **Portenta Vision Shield**

ID: *.

Revision: 4.0

Date: 1/26/2021 Time: 4:36:09 PM Sheet * of 9

File: HDConn.SchDoc Author: * RevAuthor:

CC BY SA

ARDUINO

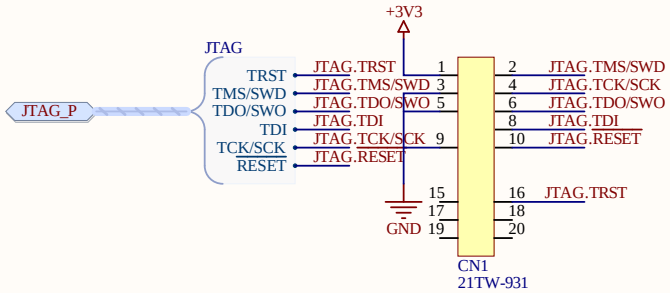

Reference Designs ARE PROVIDED "AS IS" AND "WITH ALL FAULTS. Arduino SA DISCLAIMS ALL OTHER WARRANTIES, EXPRESS OR IMPLIED, REGARDING PRODUCTS, INCLUDING BUT NOT LIMITED TO, ANY IMPLIED WARRANTIES OF MERCHANTABILITY OR FITNESS FOR A PARTICULAR PURPOSE.
Arduino SA may make changes to specifications and product descriptions at any time, without notice. The Customer must not rely on the absence or characteristics of any features or instructions marked "reserved" or "undefined". Arduino SA reserves these for future definition and shall have no responsibility whatsoever for conflicts or incompatibilities arising from future changes to them. The product information on the Web Site or Materials is subject to change without notice.
Do not finalize a design with this info. ARDUINO and other Arduino brands and logos and Trademarks of Arduino SA. All Arduino SA Trademarks cannot be used without owner's formal permission.

Title: Portenta Vision Shield			
ID: *.	Revision: 4.0		
Date: 1/26/2021 Time: 4:36:11 PM	Sheet * of 9		
File: JTAG.SchDoc	Author: Francesca Cenna	RevAuthor: *	

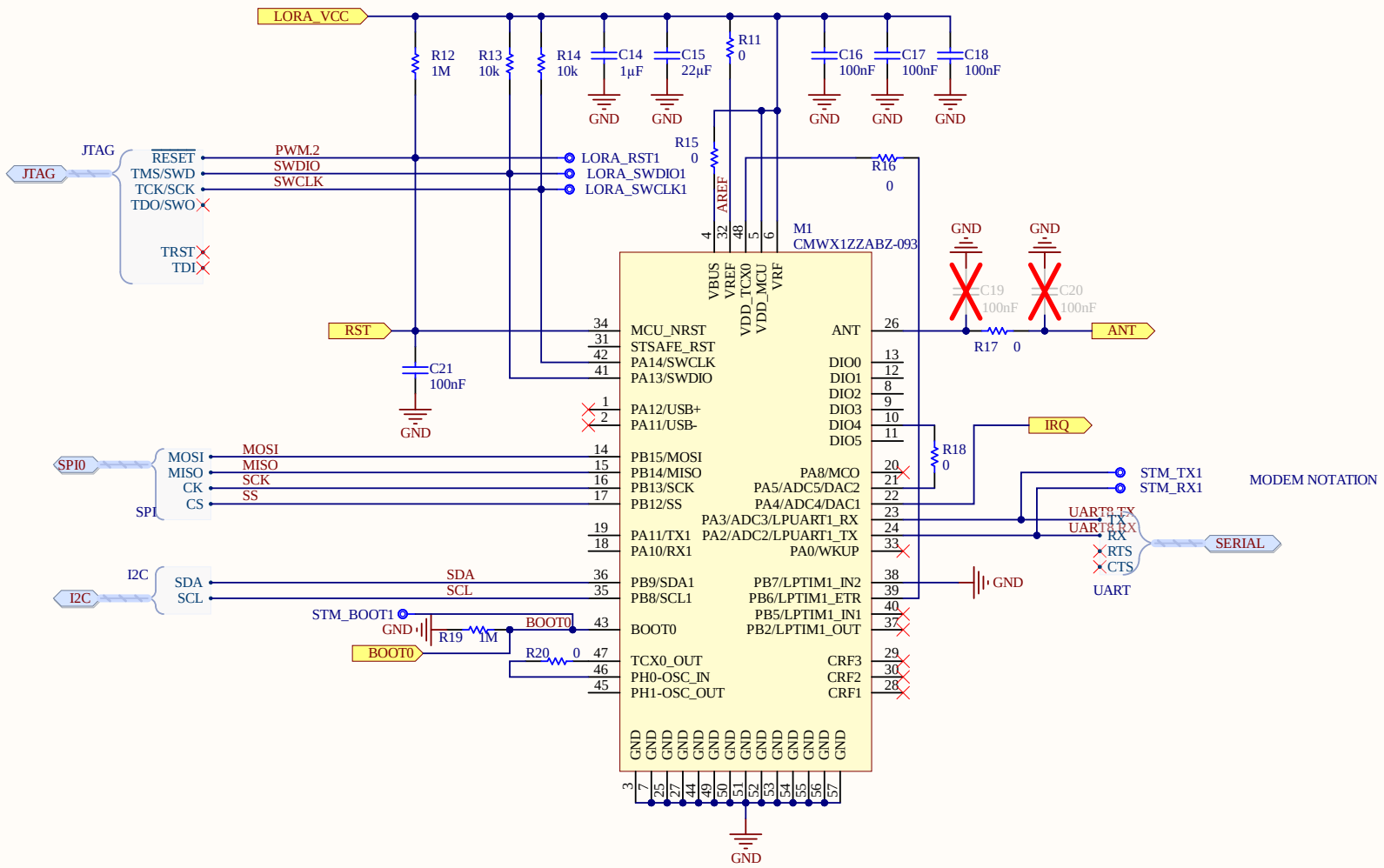

Reference Designs ARE PROVIDED "AS IS" AND "WITH ALL FAULTS. Arduino SA DISCLAIMS ALL OTHER WARRANTIES, EXPRESS OR IMPLIED, REGARDING PRODUCTS, INCLUDING BUT NOT LIMITED TO, ANY IMPLIED WARRANTIES OF MERCHANTABILITY OR FITNESS FOR A PARTICULAR PURPOSE.
Arduino SA may make changes to specifications and product descriptions at any time, without notice. The Customer must not rely on the absence or characteristics of any features or instructions marked "reserved" or "undefined". Arduino SA reserves these for future definition and shall have no responsibility whatsoever for conflicts or incompatibilities arising from future changes to them. The product information on the Web Site or Materials is subject to change without notice.
Do not finalize a design with this info. ARDUINO and other Arduino brands and logos and Trademarks of Arduino SA. All Arduino SA Trademarks cannot be used without owner's formal permission.

Title	LORA MODULE		
Size:	Number: *.	Revision: *	
Date: 1/26/2021	Time: 4:36:12 PM	Sheet * of 9	
File: SCH-00004-7_ann.SchDoc		Author *	Rev author

CC BY SA

ARDUINO

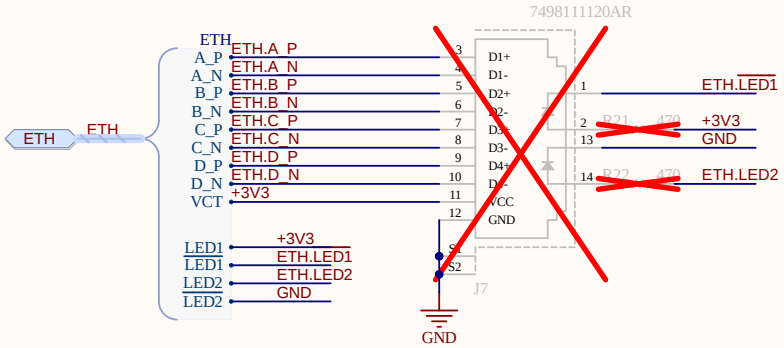

Reference Designs ARE PROVIDED "AS IS" AND "WITH ALL FAULTS. Arduino SA DISCLAIMS ALL OTHER WARRANTIES, EXPRESS OR IMPLIED, REGARDING PRODUCTS, INCLUDING BUT NOT LIMITED TO, ANY IMPLIED WARRANTIES OF MERCHANTABILITY OR FITNESS FOR A PARTICULAR PURPOSE.
Arduino SA may make changes to specifications and product descriptions at any time, without notice. The Customer must not rely on the absence or characteristics of any features or instructions marked "reserved" or "undefined". Arduino SA reserves these for future definition and shall have no responsibility whatsoever for conflicts or incompatibilities arising from future changes to them. The product information on the Web Site or Materials is subject to change without notice.
Do not finalize a design with this info. ARDUINO and other Arduino brands and logos and Trademarks of Arduino SA. All Arduino SA Trademarks cannot be used without owner's formal permission.

Title: Ethernet 7498111120AR		
ID: *.	Revision: *	
Date: 1/26/2021 Time: 4:36:13 PM	Sheet * of 9	
File: SCH-00005-6_ann.SchDoc	Author: *	RevAuthor: *

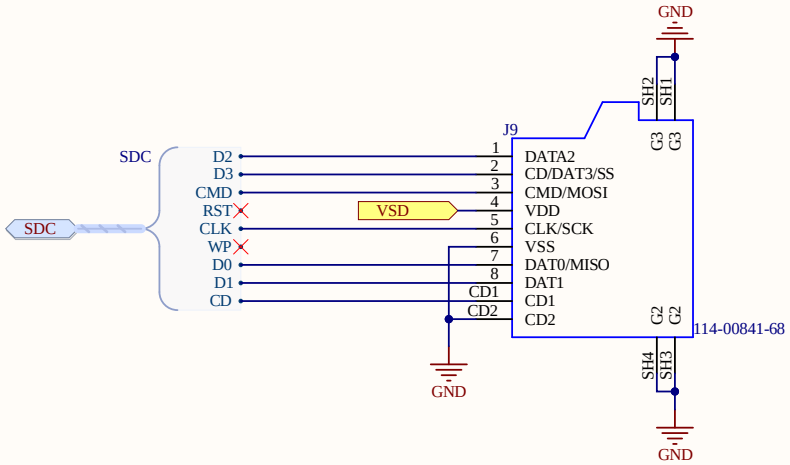

Reference Designs ARE PROVIDED "AS IS" AND "WITH ALL FAULTS. Arduino SA DISCLAIMS ALL OTHER WARRANTIES, EXPRESS OR IMPLIED, REGARDING PRODUCTS, INCLUDING BUT NOT LIMITED TO, ANY IMPLIED WARRANTIES OF MERCHANTABILITY OR FITNESS FOR A PARTICULAR PURPOSE.
Arduino SA may make changes to specifications and product descriptions at any time, without notice. The Customer must not rely on the absence or characteristics of any features or instructions marked "reserved" or "undefined". Arduino SA reserves these for future definition and shall have no responsibility whatsoever for conflicts or incompatibilities arising from future changes to them. The product information on the Web Site or Materials is subject to change without notice.
Do not finalize a design with this info. ARDUINO and other Arduino brands and logos and Trademarks of Arduino SA. All Arduino SA Trademarks cannot be used without owner's formal permission.

Title: CameraShield		
ID: *.	Revision: *	
Date: 1/26/2021 Time: 4:36:14 PM	Sheet * of 9	
File: SCH-00009-2_ann.SchDoc	Author: Francesca Cenna	RevAuthor: *