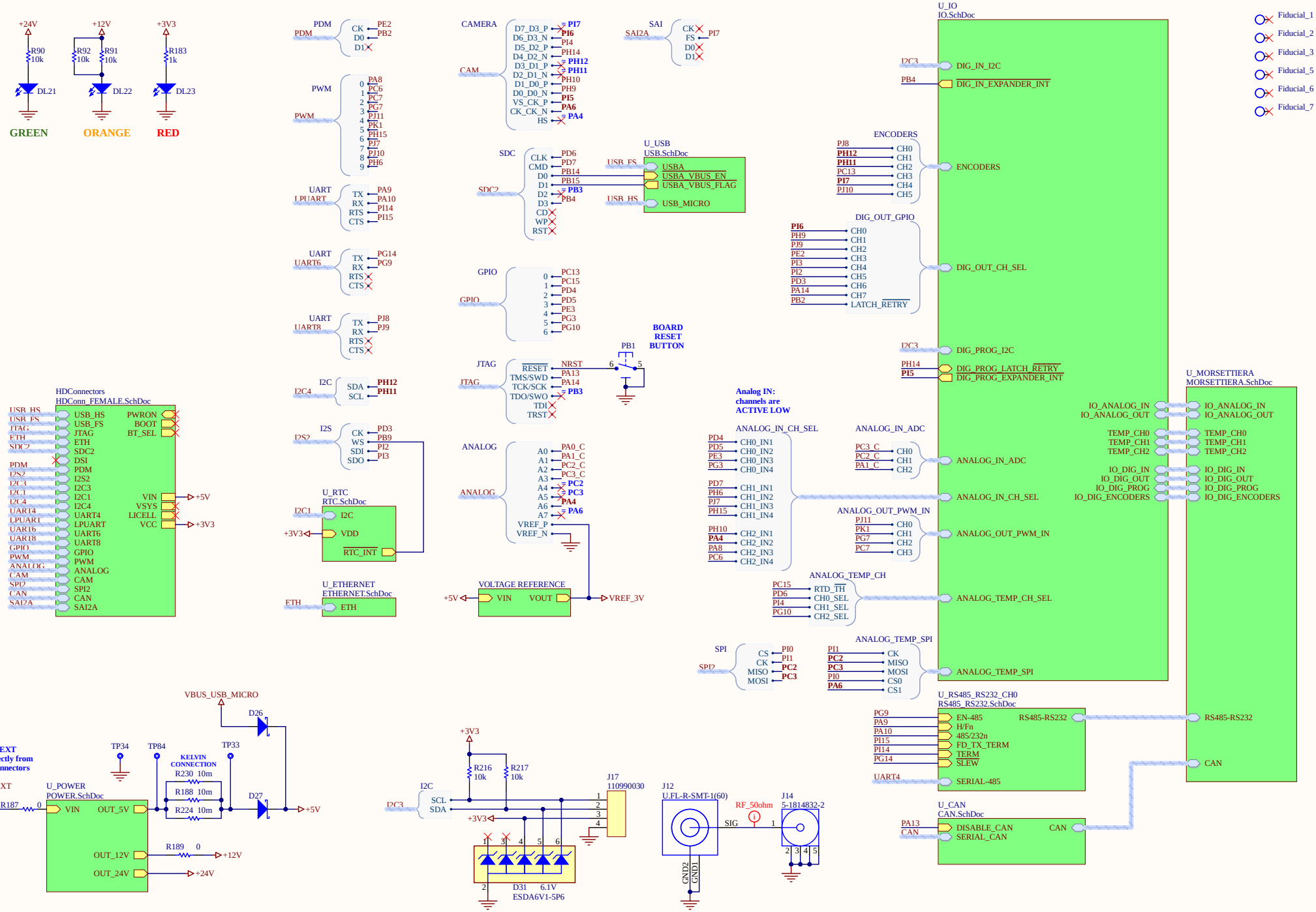

Reference Designs ARE PROVIDED "AS IS" AND "WITH ALL FAULTS. Arduino SA DISCLAIMS ALL OTHER WARRANTIES, EXPRESS OR IMPLIED, REGARDING PRODUCTS, INCLUDING BUT NOT LIMITED TO, ANY IMPLIED WARRANTIES OF MERCHANTABILITY OR FITNESS FOR A PARTICULAR PURPOSE.
Arduino SA may make changes to specifications and product descriptions at any time, without notice. The Customer must not rely on the absence or characteristics of any features or instructions marked "reserved" or "undefined".
Arduino SA reserves these for future definition and shall have no responsibility whatsoever for conflicts or incompatibilities arising from future changes to them. The product information on the Web Site or Materials is subject to change without notice.
Do not finalize a design with this info. ARDUINO and other Arduino brands and logos and Trademarks of Arduino SA. All Arduino SA Trademarks cannot be used without owner's formal permission.

Title: TOP			
ID: AKX00032	Revision: V1.1		
Date: 2021-05-11	Time: 15:10:52	Sheet 1 of 19	
File: TOP.SchDoc		Author: S.Navaretti	RevAuthor: S.Navaretti

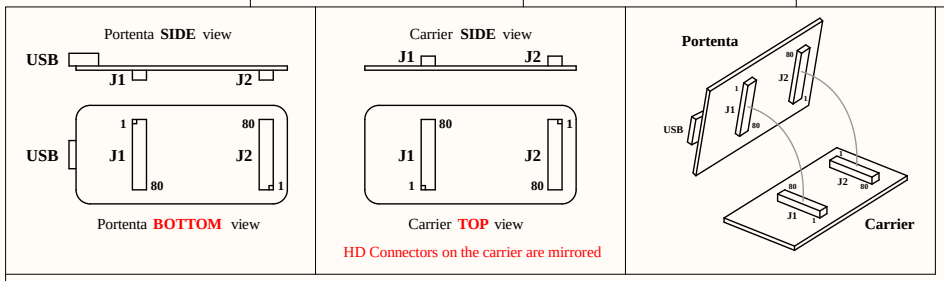

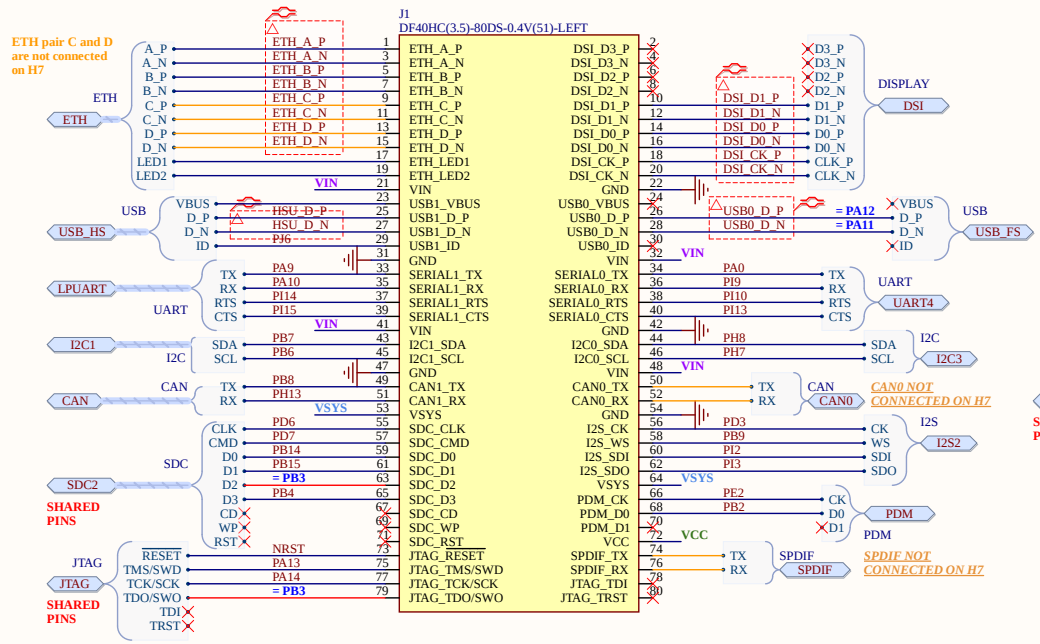

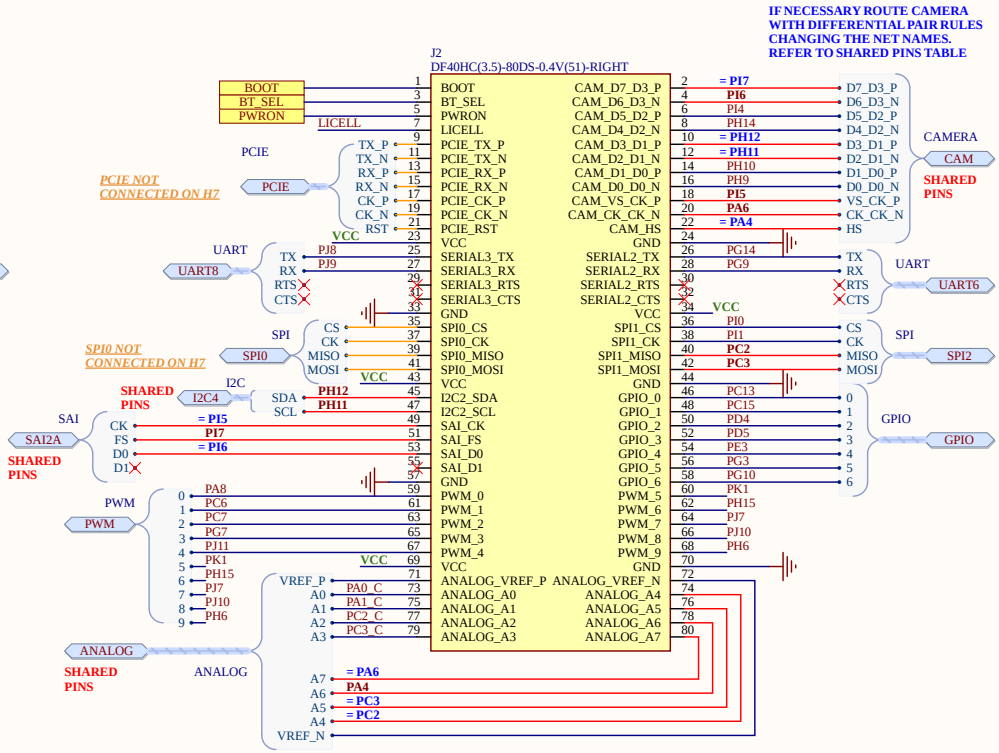

SHARED PINS TABLE

NET	BUS 1	BUS 2
PB3	JTAG	SDC2
PH11	CAM	I2C4
PH12	CAM	I2C4
PI5	CAM	SAI2A
PI6	CAM	SAI2A
PI7	CAM	SAI2A
PA4	CAM	ANALOG
PA6	CAM	ANALOG
PC2	ANALOG	SPI2
PC3	ANALOG	SPI2

POWER NETS TABLE

NET	TYPE	RANGES	DESCRIPTION
VIN — VIN	**PORTENTA INPUT**	4.1V to 6V.	Default 3.3V, PMIC (U10) programmable output.
VCC — VCC	***PORTENTA OUTPUT***	1.1V to 3.3V in steps, max 1A.	Default 3.3V, PMIC (U10) programmable output.
VSYS — VSYS	***PORTENTA RESERVED OUTPUT***	**RESERVED, DO NOT USE** 3.5V to 4.2V, max 600mA.	Default 4.2V, PMIC (U10) programmable output which is also the input voltage of the bucks inside the PMIC itself.
LICELL — LICELL	**PORTENTA INPUT**	Coinc cell max 3.6V, max 46uA.	Max 4uA with PMIC (U10) in coin cell mode, max 46uA with PMIC in standby/suspend mode.

Reference Designs ARE PROVIDED "AS IS" AND "WITH ALL FAULTS. Arduino SA DISCLAIMS ALL OTHER WARRANTIES, EXPRESS OR IMPLIED, REGARDING PRODUCTS, INCLUDING BUT NOT LIMITED TO, ANY IMPLIED WARRANTIES OF MERCHANTABILITY OR FITNESS FOR A PARTICULAR PURPOSE.
Arduino SA may make changes to specifications and product descriptions at any time, without notice. The Customer must not rely on the absence or characteristics of any features or instructions marked "reserved" or "undefined".
Arduino SA reserves these for future definition and shall have no responsibility whatsoever for conflicts or incompatibilities arising from future changes to them. The product information on the Web Site or Materials is subject to change without notice.
Do not finalize a design with this info. ARDUINO and other Arduino brands and logos and Trademarks of Arduino SA. All Arduino SA Trademarks cannot be used without owner's formal permission.

Title: **HD Connectors female**		
ID: AKX00032	Revision: V1.1	
Date: 2021-05-11 Time: 15:10:53	Sheet 2 of 19	
File: HDConn_FEMALE.SchDoc	Author: S.Navaretti	RevAuthor: *

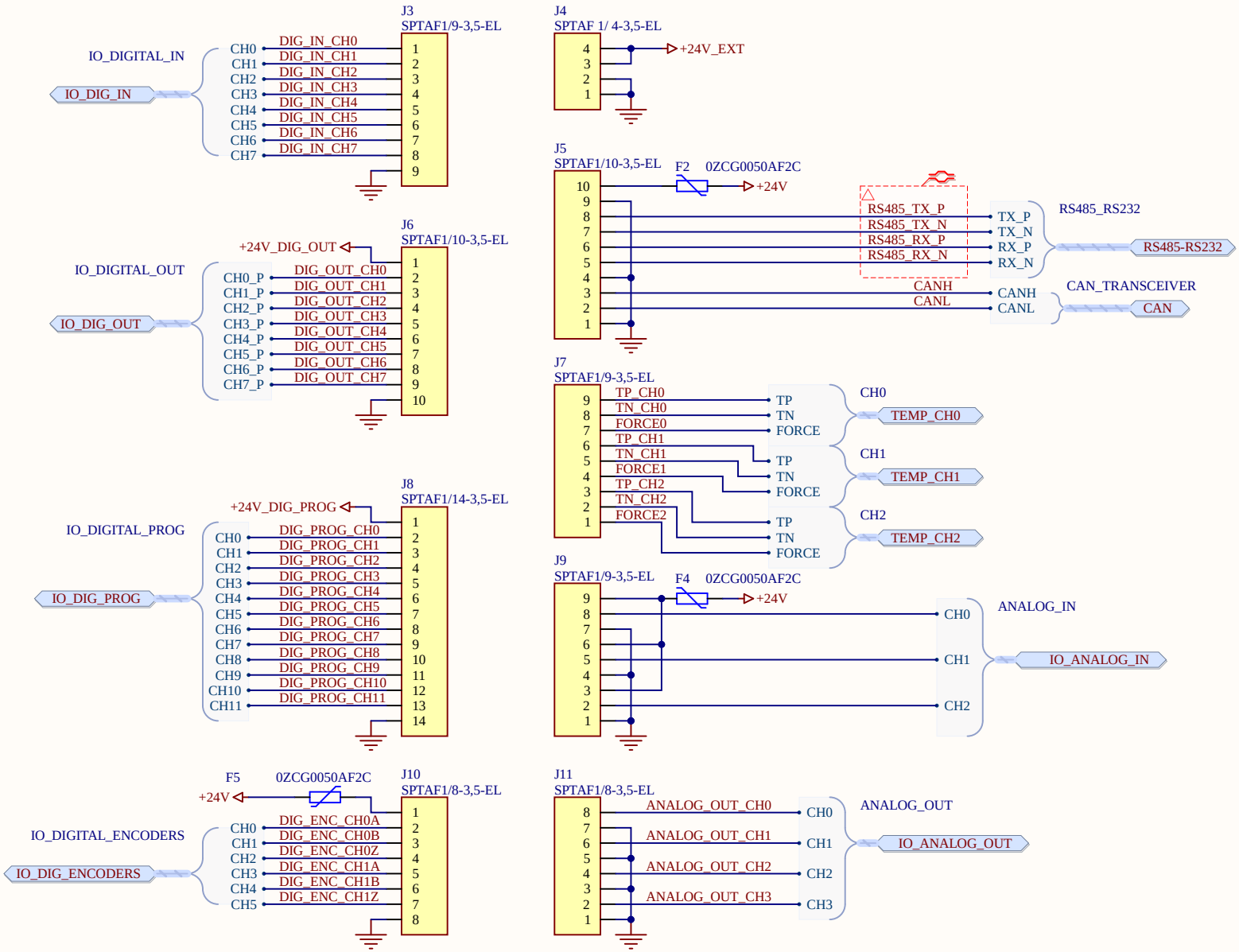

Reference Designs ARE PROVIDED "AS IS" AND "WITH ALL FAULTS. Arduino SA DISCLAIMS ALL OTHER WARRANTIES, EXPRESS OR IMPLIED, REGARDING PRODUCTS, INCLUDING BUT NOT LIMITED TO, ANY IMPLIED WARRANTIES OF MERCHANTABILITY OR FITNESS FOR A PARTICULAR PURPOSE.
Arduino SA may make changes to specifications and product descriptions at any time, without notice. The Customer must not rely on the absence or characteristics of any features or instructions marked "reserved" or "undefined". Arduino SA reserves these for future definition and shall have no responsibility whatsoever for conflicts or incompatibilities arising from future changes to them. The product information on the Web Site or Materials is subject to change without notice.
Do not finalize a design with this info. ARDUINO and other Arduino brands and logos and Trademarks of Arduino SA. All Arduino SA Trademarks cannot be used without owner's formal permission.

Title: **MORSETTIERA**			
ID: AKX00032	Revision: V1.1		
Date: 2021-05-11 Time: 15:10:54	Sheet 3 of 19		
File: MORSETTIERA.SchDoc	Author: S.Navaretti	RevAuthor: S.Navaretti	

CC BY SA

ARDUINO

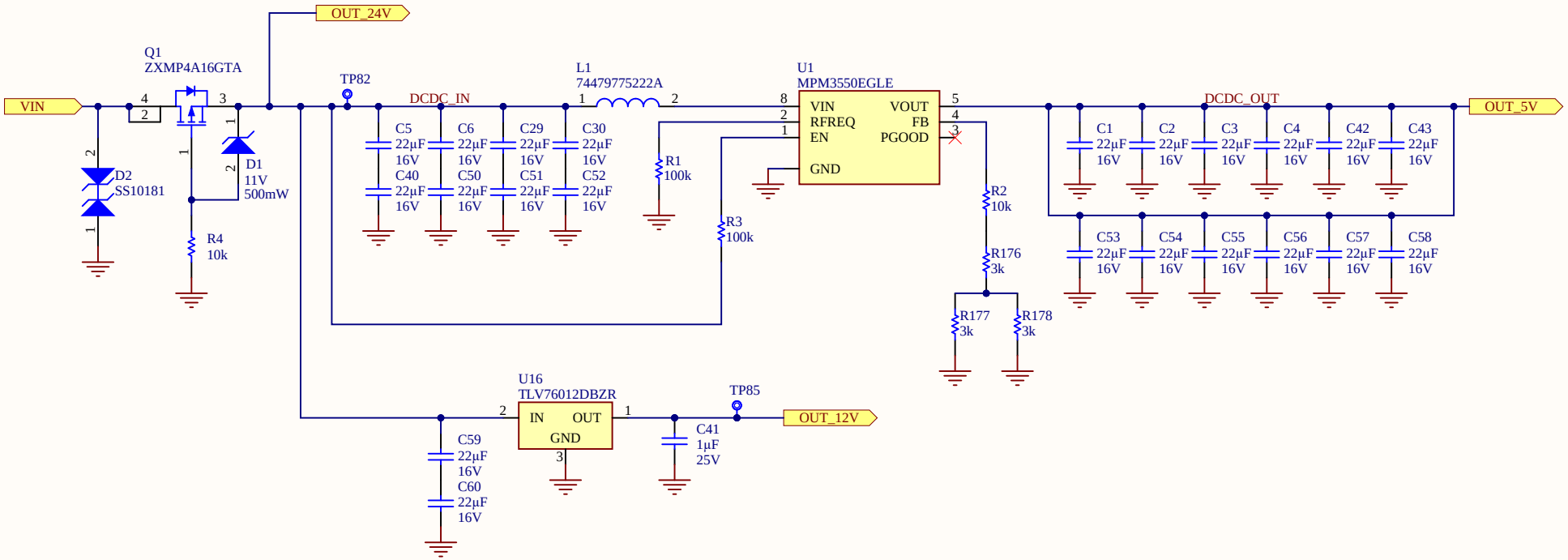

Reference Designs ARE PROVIDED "AS IS" AND "WITH ALL FAULTS. Arduino SA DISCLAIMS ALL OTHER WARRANTIES, EXPRESS OR IMPLIED, REGARDING PRODUCTS, INCLUDING BUT NOT LIMITED TO, ANY IMPLIED WARRANTIES OF MERCHANTABILITY OR FITNESS FOR A PARTICULAR PURPOSE.
Arduino SA may make changes to specifications and product descriptions at any time, without notice. The Customer must not rely on the absence or characteristics of any features or instructions marked "reserved" or "undefined". Arduino SA reserves these for future definition and shall have no responsibility whatsoever for conflicts or incompatibilities arising from future changes to them. The product information on the Web Site or Materials is subject to change without notice.
Do not finalize a design with this info. ARDUINO and other Arduino brands and logos and Trademarks of Arduino SA. All Arduino SA Trademarks cannot be used without owner's formal permission.

Title: **POWER**			
ID: AKX00032	Revision: V1.1		
Date: 2021-05-11	Time: 15:10:55	Sheet 4 of 19	
File: POWER.SchDoc	Author: S.Navaretti	RevAuthor: S.Navaretti	

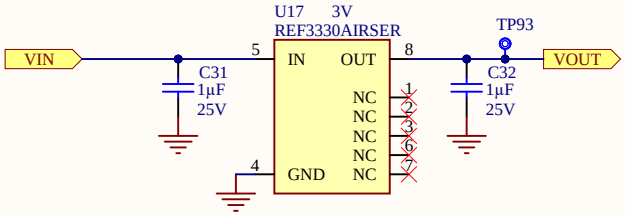

Reference Designs ARE PROVIDED "AS IS" AND "WITH ALL FAULTS. Arduino SA DISCLAIMS ALL OTHER WARRANTIES, EXPRESS OR IMPLIED, REGARDING PRODUCTS, INCLUDING BUT NOT LIMITED TO, ANY IMPLIED WARRANTIES OF MERCHANTABILITY OR FITNESS FOR A PARTICULAR PURPOSE.
Arduino SA may make changes to specifications and product descriptions at any time, without notice. The Customer must not rely on the absence or characteristics of any features or instructions marked "reserved" or "undefined". Arduino SA reserves these for future definition and shall have no responsibility whatsoever for conflicts or incompatibilities arising from future changes to them. The product information on the Web Site or Materials is subject to change without notice.
Do not finalize a design with this info. ARDUINO and other Arduino brands and logos and Trademarks of Arduino SA. All Arduino SA Trademarks cannot be used without owner's formal permission.

Title: **VOLTAGE REFERENCE**		
ID: AKX00032	Revision: V1.1	
Date: 2021-05-11 Time: 15:10:56	Sheet 5 of 19	
File: ADC_VOLTAGE_REFERENCE.SchDoc	Author: S.Navaretti	RevAuthor: S.Navaretti

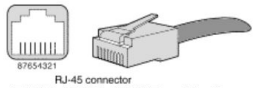

RJ10, RJ45 CAN Bus PinOut

RJ45 Pin #	RJ10 Pin #	Signal name	Signal Description
1	2	CAN_H	Dominant High
2	3	CAN_L	Dominant Low
3	4	CAN_GND	Ground
4	-	Reserved	Upgrade Path
5	-	Reserved	Upgrade Path
6	-	CAN_SHLD	CAN Shield, Optional
7	-	CAN_GND	Ground
8	1	CAN_V+	Power, Optional

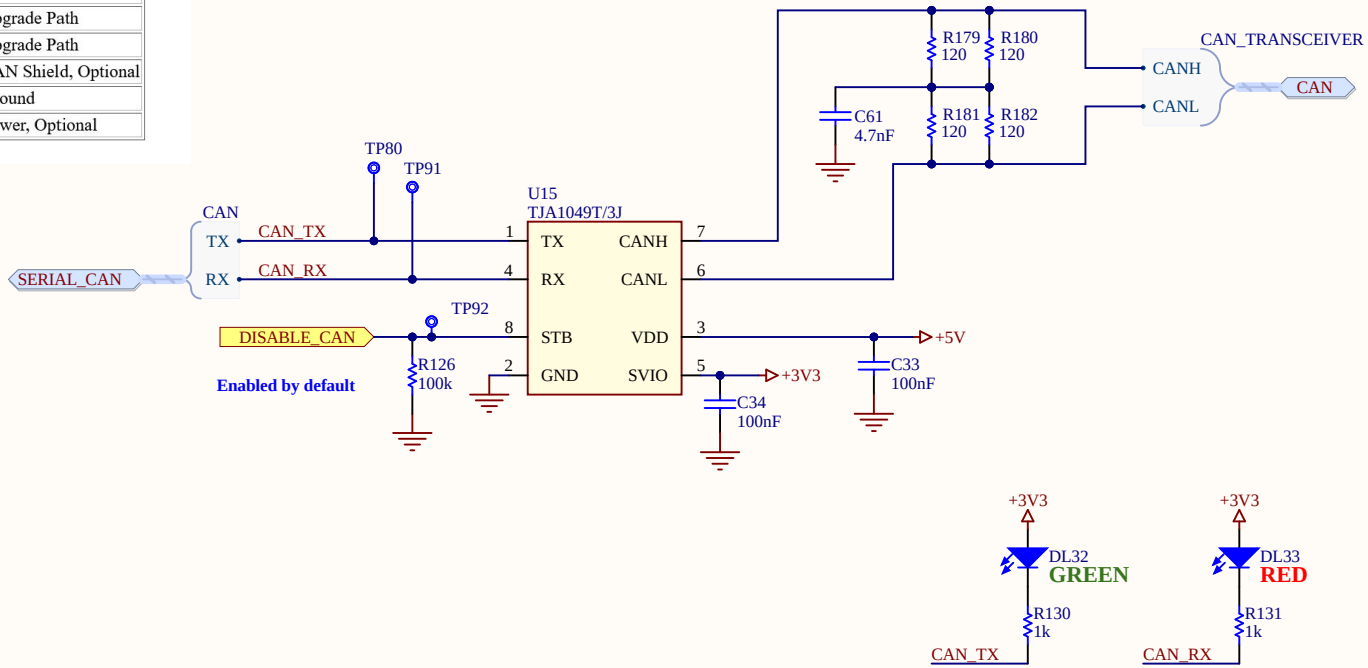

Reference Designs ARE PROVIDED "AS IS" AND "WITH ALL FAULTS. Arduino SA DISCLAIMS ALL OTHER WARRANTIES, EXPRESS OR IMPLIED, REGARDING PRODUCTS, INCLUDING BUT NOT LIMITED TO, ANY IMPLIED WARRANTIES OF MERCHANTABILITY OR FITNESS FOR A PARTICULAR PURPOSE.
Arduino SA may make changes to specifications and product descriptions at any time, without notice. The Customer must not rely on the absence or characteristics of any features or instructions marked "reserved" or "undefined". Arduino SA reserves these for future definition and shall have no responsibility whatsoever for conflicts or incompatibilities arising from future changes to them. The product information on the Web Site or Materials is subject to change without notice.
Do not finalize a design with this info. ARDUINO and other Arduino brands and logos and Trademarks of Arduino SA. All Arduino SA Trademarks cannot be used without owner's formal permission.

Title: CAN		
ID: AKX00032	Revision: V1.1	
Date: 2021-05-11 Time: 15:10:57	Sheet 6 of 19	
File: CAN.SchDoc	Author: S.Navaretti	RevAuthor: S.Navaretti

PIN DESCRIPTIONS

Pin	Name	RS-232	RS-485 Full Duplex	RS-485 Half Duplex
1				
2	GND	Ground		
3	T1OUT, B/Z	Transmitter 1 Output	Z Driver Neg Output	B/Z Neg Input/Output
4	T2OUT, A/Y	Transmitter 2 Output	Y Driver Pos Output	A/Y Pos Input/Output
5				
6	R1OUT	Receiver 1 Output	X	X
7	R2OUT, RO	Receiver 2 Output	Receiver TTL Output	Receiver TTL Output
8				
9				
10	$\overline{SHDN}$	Low power shutdown mode when low		
11	$\overline{SLEW}$	Data rate limited to 250kbps when low		
12	FD_TX_TERM	X	120Ω Y-Z termination enabled when both TERM and FD_TX_TERM are high	X
13	TERM	X	120Ω A-B termination enabled when high	
14	RS-485/$\overline{RS-232}$	0	1	1
15	HALF/$\overline{FULL}$	X	0	1
16				
17	GND	Ground		
18	R2IN, A	Receiver 2 Input	A Pos Receiver Input	X
19	R1IN, B	Receiver 1 Input	B Neg Receiver Input	X
20	$\overline{RE}$	X	Receiver enabled when low	
21	T2IN, DE	Transmitter 2 Input	Driver enabled when high	
22	T1IN, DI	Transmitter 1 Input	Driver TTL Input	
23				
24				
25	V-	Charge pump negative supply, 0.1µF from ground		
26	C2-	Charge pump cap 2 negative lead		
27	C2+	Charge pump cap 2 positive lead, 0.1µF		
28	V+	Charge pump positive supply, 0.1µF to ground		
29	C1+	Charge pump cap 1 positive lead, 0.1µF		
30	VL	Logic Supply for TTL Inputs and Outputs, V_L = +1.65V to +5.5V or tie to V_{CC}		
31	VCC	Main Supply, V_{CC} = +3.0V to +5.5V, bypass to ground with 1.0µF		
32	C1-	Charge pump cap 1 negative lead		

Table 1: RS-232 TX Truth Table

INPUTS			OUTPUTS
$\overline{SHDN}$	RS-485/$\overline{RS-232}$	DI/T1IN, DE/T2IN	Z(B)/T1OUT, Y(A)/T2OUT
0	X	X	1/8th unit load
1	0	0	1
1	0	1	0
1	1	X	RS-485 Mode

Table 2: RS-232 RX Truth Table

INPUTS			OUTPUTS
$\overline{SHDN}$	RS-485/$\overline{RS-232}$	B/R1IN, A/R2IN	R1OUT, RO/R2OUT
X	0	0	1
X	0	1	0
X	0	Inputs open	1
X	1	X	R1OUT High-Z, RO/R2OUT in RS-485 Mode

Table 3: RS-485/422 TX Truth Table

INPUTS				OUTPUTS	
$\overline{SHDN}$	RS-485/$\overline{RS-232}$	DE/T2IN	DI/T1IN	Z(B)/T1OUT	Y(A)/T2OUT
0	X	X	X	1/8th unit load	1/8th unit load
1	1	0	X	1/8th unit load	1/8th unit load
1	1	1	0	1	0
1	1	1	1	0	1
X	0	X	X	RS-232 Mode	

Table 4: RS-485/422 RX Truth Table

INPUTS						OUTPUT
RS-485/$\overline{RS-232}$	$\overline{SHDN}$	HALF/$\overline{FULL}$	$\overline{RE}$	(A-B)	(Y-Z)	RO/R2OUT
1	0	X	X	X	X	High-Z
1	1	0	0	≥ -50mV	X	1
1	1	0	0	≤ -200mV	X	0
1	1	0	0	Floating	X	1
1	1	1	0	X	≥ -50mV	1
1	1	1	0	X	≤ -200mV	0
1	1	1	0	X	Floating	1
1	1	X	1	X	X	High-Z
0	X	X	X	X	X	RS-232 Mode

Table 5: RS-485/422 Termination Truth Table

FD_TX_TERM	TERM	RS-485/$\overline{RS-232}$	HALF/$\overline{FULL}$	TX TERM	RX TERM
Pin 12	Pin 13	Pin 14	Pin 15	Pins 3-4	Pins 18-19
X	0	1	0	-	-
0	1	1	0	-	ON
1	1	1	0	ON	ON
X	0	1	1	-	-
X	1	1	1	ON	-
X	X	0	X	-	-

The DE and $\overline{RE}$ pins have no effect on the termination setting in any mode.

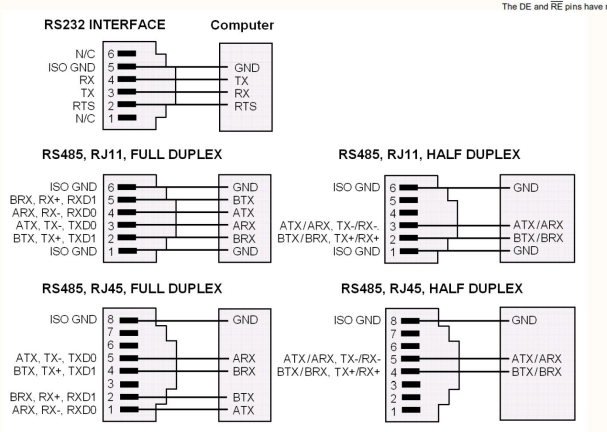

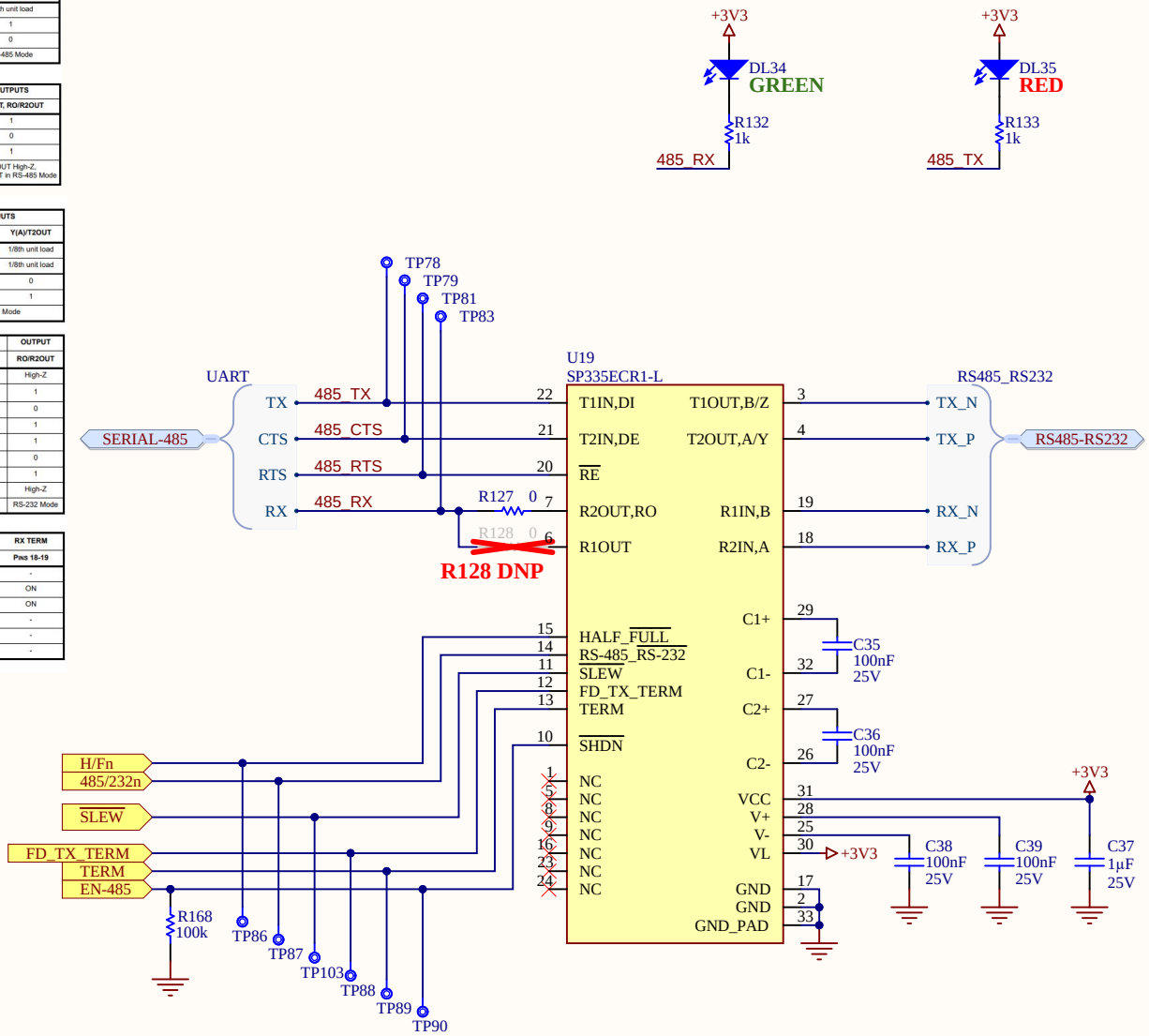

Reference Designs ARE PROVIDED "AS IS" AND "WITH ALL FAULTS. Arduino SA DISCLAIMS ALL OTHER WARRANTIES, EXPRESS OR IMPLIED, REGARDING PRODUCTS, INCLUDING BUT NOT LIMITED TO, ANY IMPLIED WARRANTIES OF MERCHANTABILITY OR FITNESS FOR A PARTICULAR PURPOSE.
Arduino SA may make changes to specifications and product descriptions at any time, without notice. The Customer must not rely on the absence or characteristics of any features or instructions marked "reserved" or "undefined". Arduino SA reserves these for future definition and shall have no responsibility whatsoever for conflicts or incompatibilities arising from future changes to them. The product information on the Web Site or Materials is subject to change without notice.
Do not finalize a design with this info. ARDUINO and other Arduino brands and logos and Trademarks of Arduino SA. All Arduino SA Trademarks cannot be used without owner's formal permission.

Title: **RS485 / RS422 / RS232**

ID: AKX00032 | Revision: V1.1

Date: 2021-05-11 Time: 15:10:58 | Sheet 7 of 19

File: RS485_RS232.SchDoc | Author: S.Navaretti | RevAuthor: S.Navaretti

CC BY SA

ARDUINO

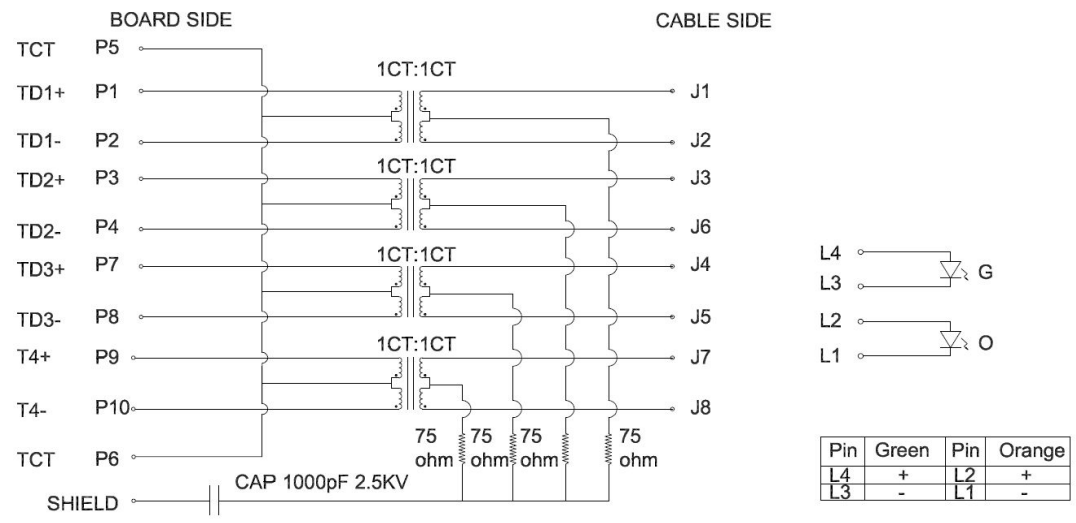

Pin	Green	Pin	Orange
L4	+	L2	+
L3	-	L1	-

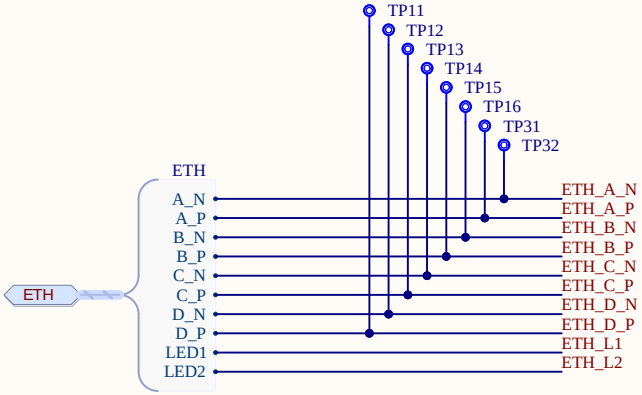

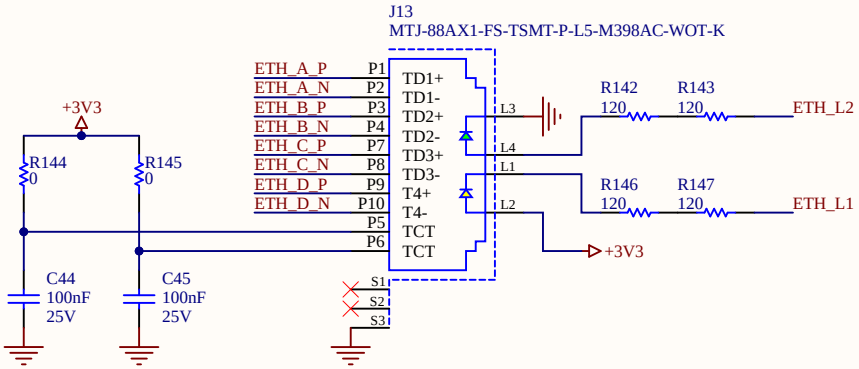

Reference Designs ARE PROVIDED "AS IS" AND "WITH ALL FAULTS. Arduino SA DISCLAIMS ALL OTHER WARRANTIES, EXPRESS OR IMPLIED, REGARDING PRODUCTS, INCLUDING BUT NOT LIMITED TO, ANY IMPLIED WARRANTIES OF MERCHANTABILITY OR FITNESS FOR A PARTICULAR PURPOSE.
Arduino SA may make changes to specifications and product descriptions at any time, without notice. The Customer must not rely on the absence or characteristics of any features or instructions marked "reserved" or "undefined". Arduino SA reserves these for future definition and shall have no responsibility whatsoever for conflicts or incompatibilities arising from future changes to them. The product information on the Web Site or Materials is subject to change without notice.
Do not finalize a design with this info. ARDUINO and other Arduino brands and logos and Trademarks of Arduino SA. All Arduino SA Trademarks cannot be used without owner's formal permission.

Title: **ETHERNET**			
ID: AKX00032	Revision: V1.1		
Date: 2021-05-11 Time: 15:10:58	Sheet 8 of 19		
File: ETHERNET.SchDoc	Author: S.Navaretti	RevAuthor: S.Navaretti	

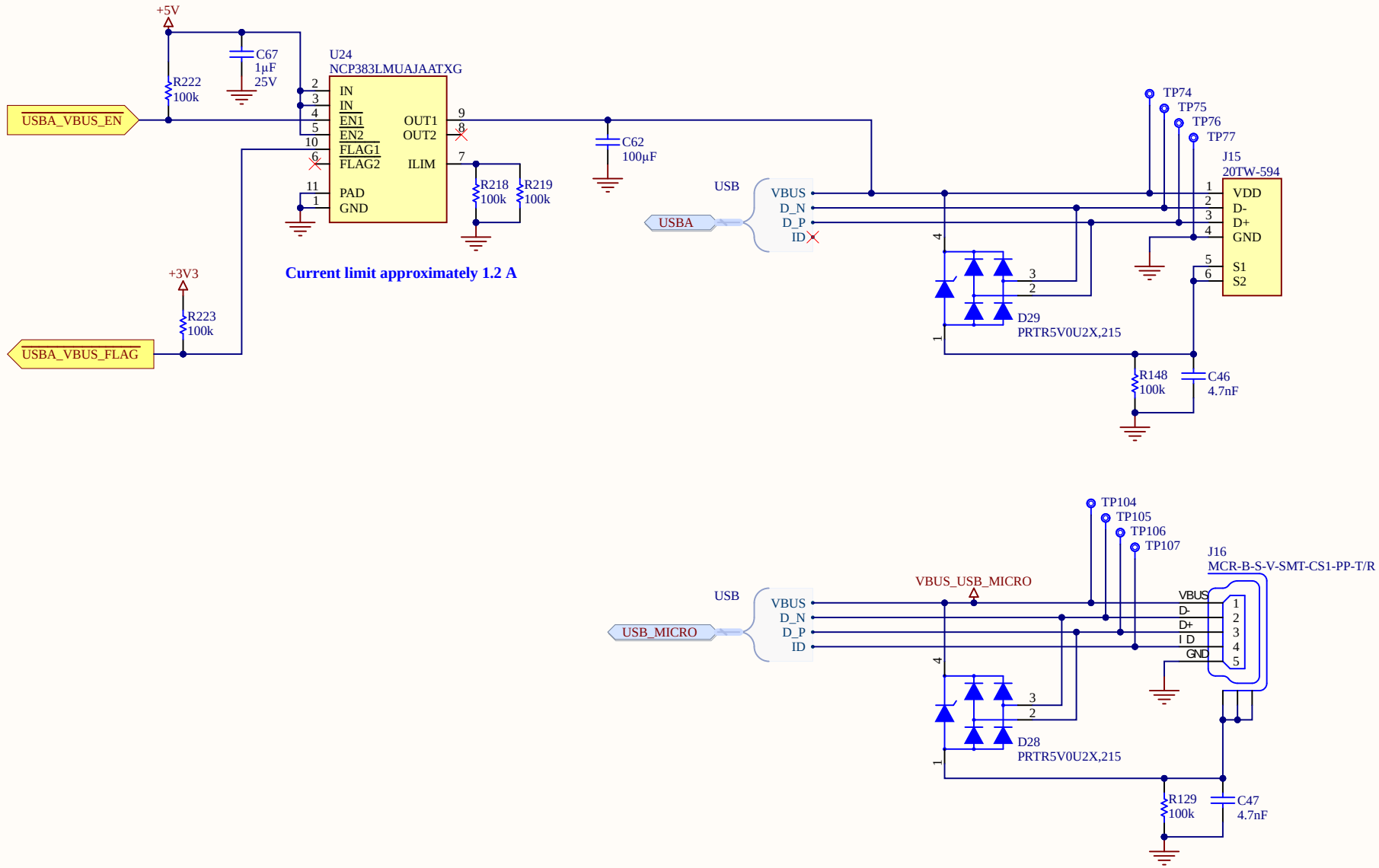

Reference Designs ARE PROVIDED "AS IS" AND "WITH ALL FAULTS. Arduino SA DISCLAIMS ALL OTHER WARRANTIES, EXPRESS OR IMPLIED, REGARDING PRODUCTS, INCLUDING BUT NOT LIMITED TO, ANY IMPLIED WARRANTIES OF MERCHANTABILITY OR FITNESS FOR A PARTICULAR PURPOSE.
Arduino SA may make changes to specifications and product descriptions at any time, without notice. The Customer must not rely on the absence or characteristics of any features or instructions marked "reserved" or "undefined". Arduino SA reserves these for future definition and shall have no responsibility whatsoever for conflicts or incompatibilities arising from future changes to them. The product information on the Web Site or Materials is subject to change without notice.
Do not finalize a design with this info. ARDUINO and other Arduino brands and logos and Trademarks of Arduino SA. All Arduino SA Trademarks cannot be used without owner's formal permission.

Title: **USB**			
ID: AKX00032	Revision: V1.1		
Date: 2021-05-11	Time: 15:10:59	Sheet 9 of 19	
File: USB.SchDoc	Author: S.Navaretti	RevAuthor: S.Navaretti	

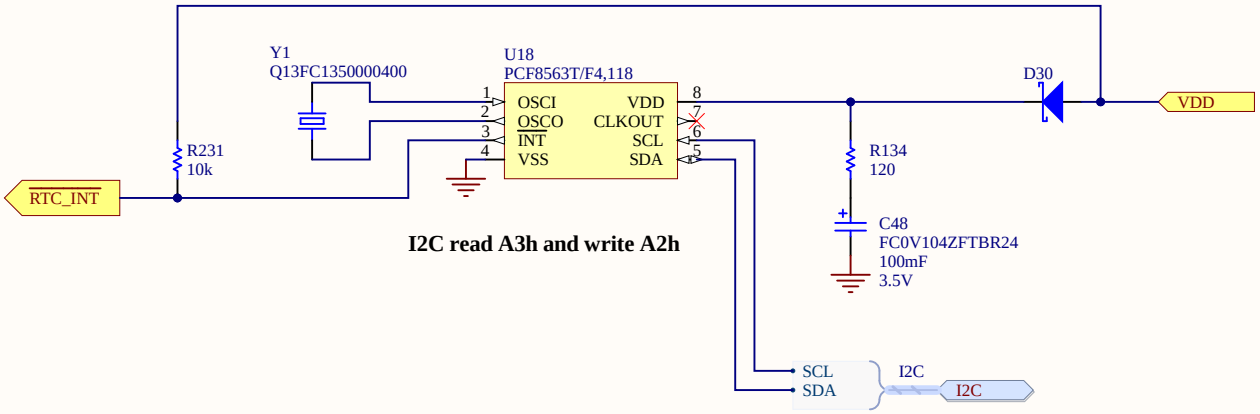

I2C read A3h and write A2h

Reference Designs ARE PROVIDED "AS IS" AND "WITH ALL FAULTS. Arduino SA DISCLAIMS ALL OTHER WARRANTIES, EXPRESS OR IMPLIED, REGARDING PRODUCTS, INCLUDING BUT NOT LIMITED TO, ANY IMPLIED WARRANTIES OF MERCHANTABILITY OR FITNESS FOR A PARTICULAR PURPOSE.
Arduino SA may make changes to specifications and product descriptions at any time, without notice. The Customer must not rely on the absence or characteristics of any features or instructions marked "reserved" or "undefined". Arduino SA reserves these for future definition and shall have no responsibility whatsoever for conflicts or incompatibilities arising from future changes to them. The product information on the Web Site or Materials is subject to change without notice.
Do not finalize a design with this info. ARDUINO and other Arduino brands and logos and Trademarks of Arduino SA. All Arduino SA Trademarks cannot be used without owner's formal permission.

Title: **RTC**		
ID: AKX00032	Revision: V1.1	
Date: 2021-05-11 Time: 15:11:00	Sheet 10 of 19	
File: RTC.SchDoc	Author: S.Navaretti	RevAuthor: S.Navaretti

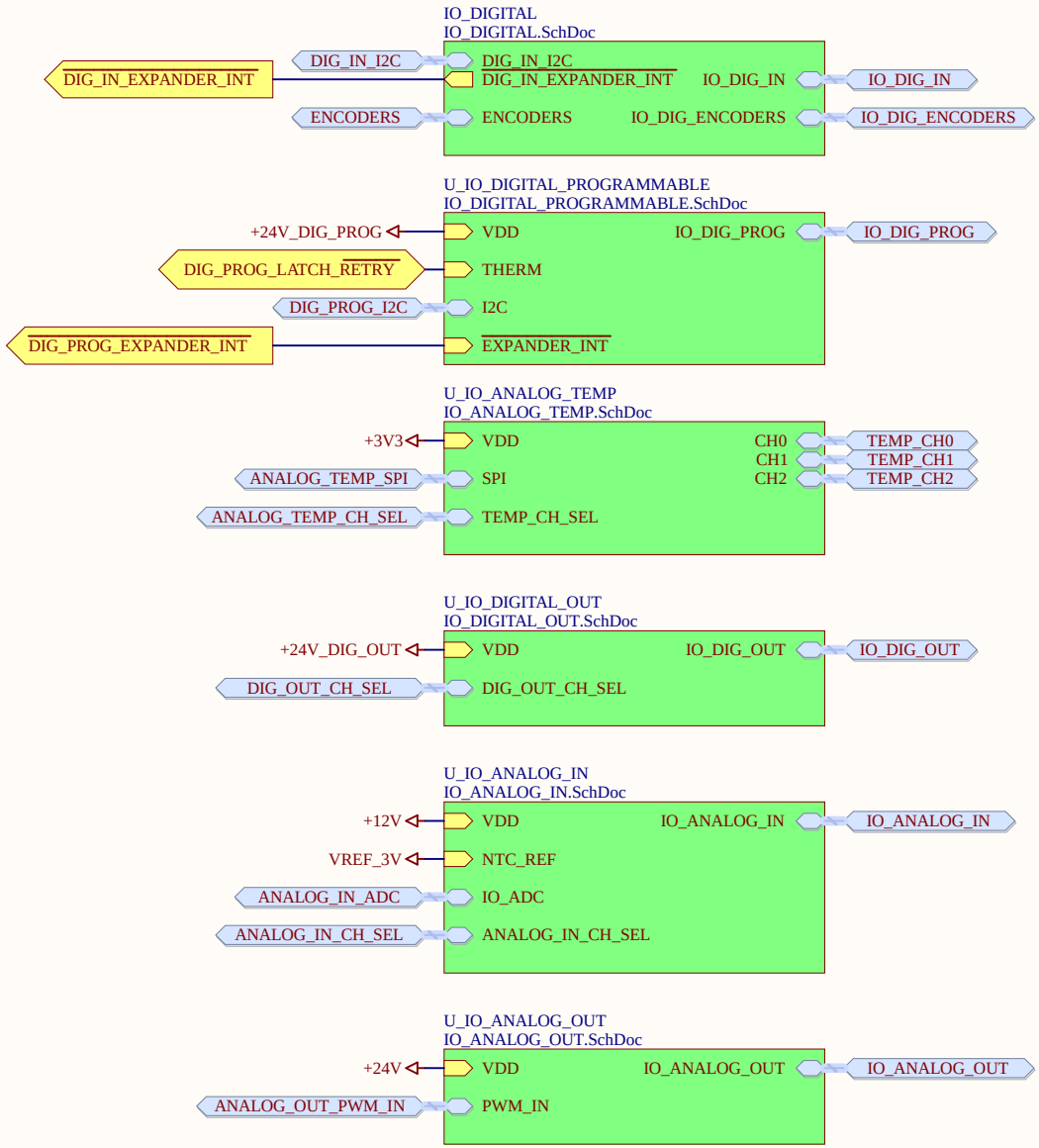

Reference Designs ARE PROVIDED "AS IS" AND "WITH ALL FAULTS. Arduino SA DISCLAIMS ALL OTHER WARRANTIES, EXPRESS OR IMPLIED, REGARDING PRODUCTS, INCLUDING BUT NOT LIMITED TO, ANY IMPLIED WARRANTIES OF MERCHANTABILITY OR FITNESS FOR A PARTICULAR PURPOSE.
Arduino SA may make changes to specifications and product descriptions at any time, without notice. The Customer must not rely on the absence or characteristics of any features or instructions marked "reserved" or "undefined". Arduino SA reserves these for future definition and shall have no responsibility whatsoever for conflicts or incompatibilities arising from future changes to them. The product information on the Web Site or Materials is subject to change without notice.
Do not finalize a design with this info. ARDUINO and other Arduino brands and logos and Trademarks of Arduino SA. All Arduino SA Trademarks cannot be used without owner's formal permission.

Title: **IO TOP**			
ID: AKX00032	Revision: V1.1		
Date: 2021-05-11 Time: 15:11:01	Sheet 11 of 19		
File: IO.SchDoc	Author: S.Navaretti	RevAuthor: S.Navaretti	

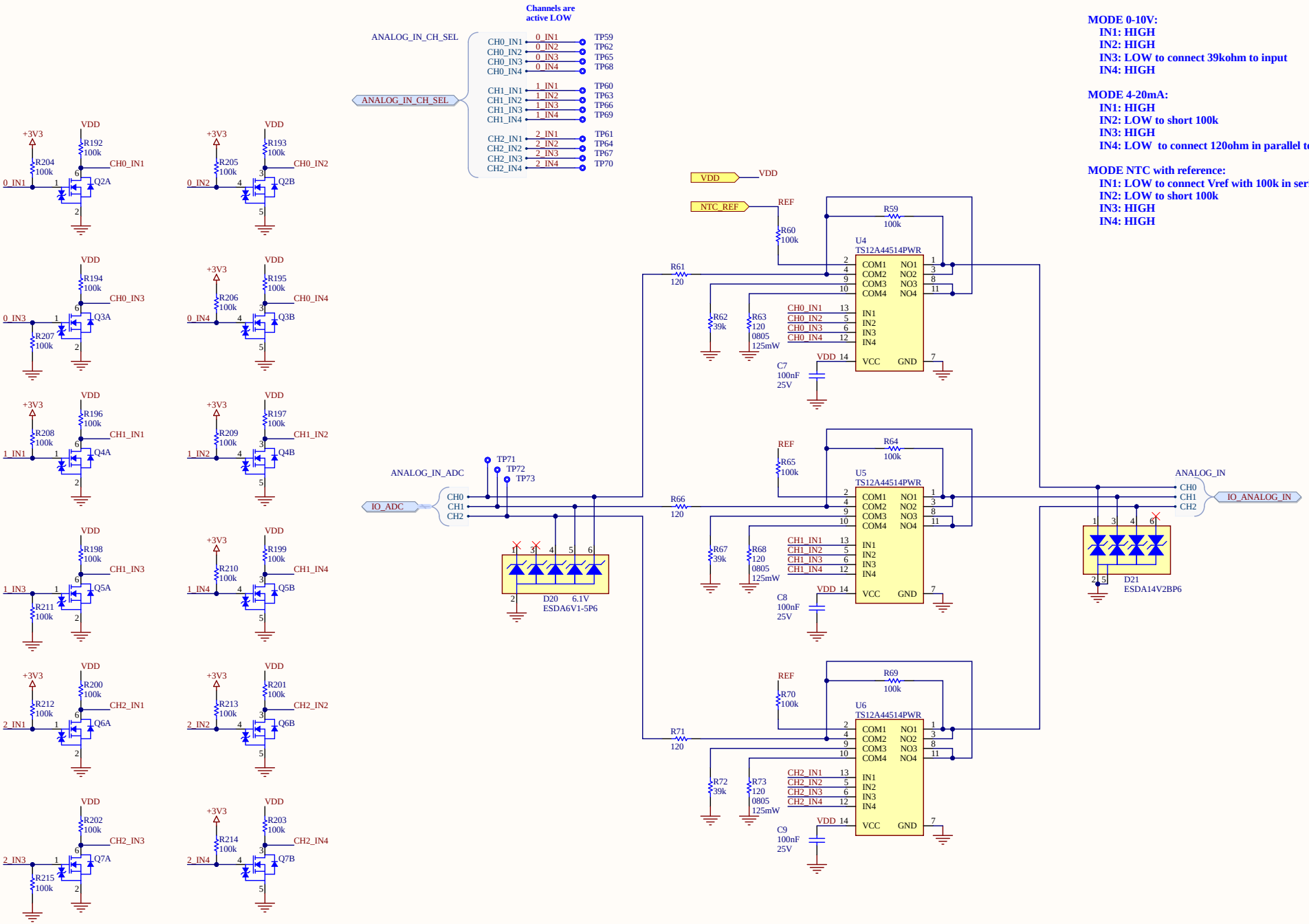

Reference Designs ARE PROVIDED "AS IS" AND "WITH ALL FAULTS. Arduino SA DISCLAIMS ALL OTHER WARRANTIES, EXPRESS OR IMPLIED, REGARDING PRODUCTS, INCLUDING BUT NOT LIMITED TO, ANY IMPLIED WARRANTIES OF MERCHANTABILITY OR FITNESS FOR A PARTICULAR PURPOSE.
Arduino SA may make changes to specifications and product descriptions at any time, without notice. The Customer must not rely on the absence or characteristics of any features or instructions marked "reserved" or "undefined".
Arduino SA reserves these for future definition and shall have no responsibility whatsoever for conflicts or incompatibilities arising from future changes to them. The product information on the Web Site or Materials is subject to change without notice.
Do not finalize a design with this info. ARDUINO and other Arduino brands and logos and Trademarks of Arduino SA. All Arduino SA Trademarks cannot be used without owner's formal permission.

Title: ANALOG IN		
ID: AKX00032	Revision: V1.1	
Date: 2021-05-11 Time: 15:11:02	Sheet 12 of 19	
File: IO_ANALOG_IN.SchDoc	Author: S.Navaretti	RevAuthor: S.Navaretti

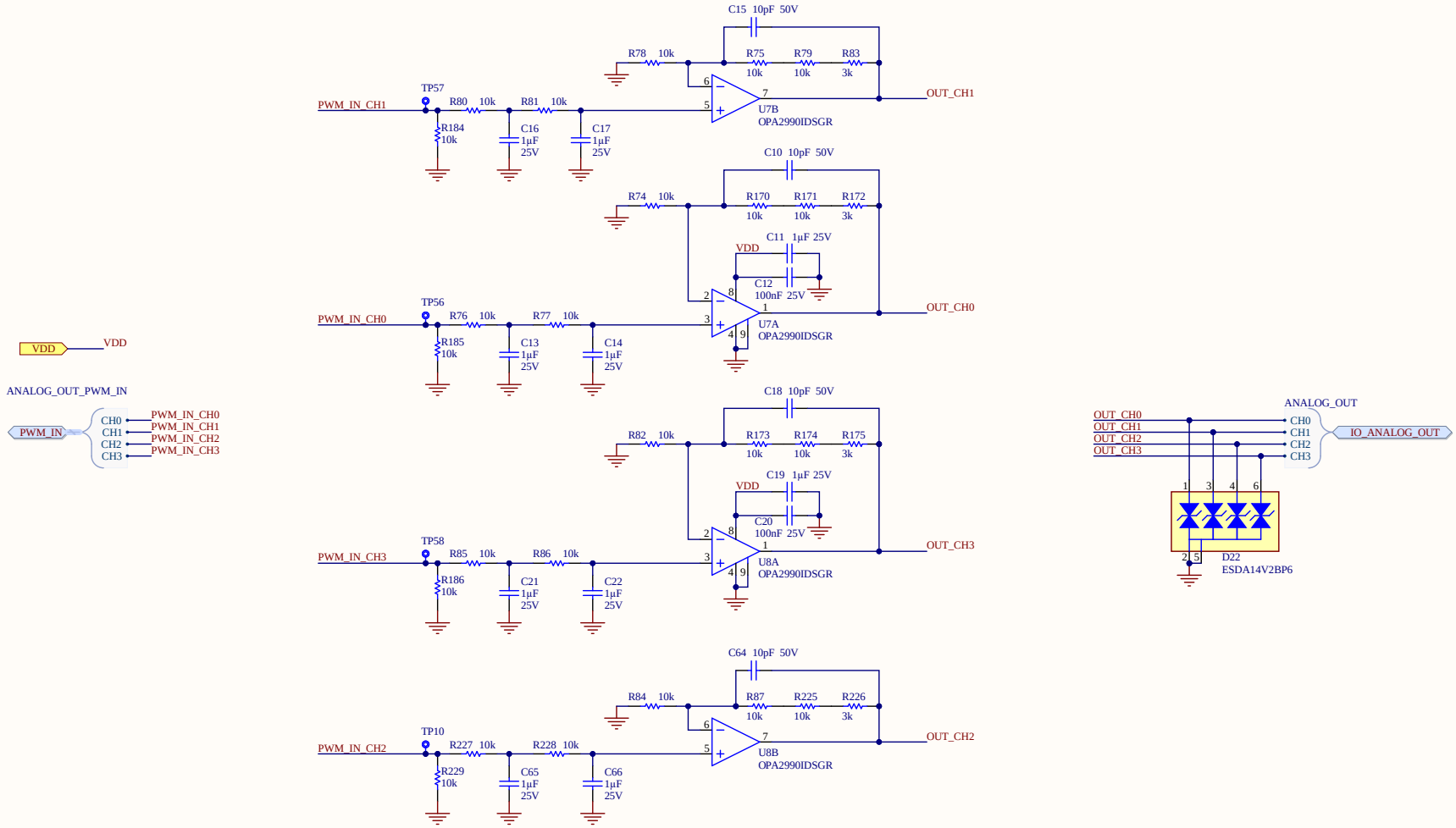

Reference Designs ARE PROVIDED "AS IS" AND "WITH ALL FAULTS. Arduino SA DISCLAIMS ALL OTHER WARRANTIES, EXPRESS OR IMPLIED, REGARDING PRODUCTS, INCLUDING BUT NOT LIMITED TO, ANY IMPLIED WARRANTIES OF MERCHANTABILITY OR FITNESS FOR A PARTICULAR PURPOSE.
Arduino SA may make changes to specifications and product descriptions at any time, without notice. The Customer must not rely on the absence or characteristics of any features or instructions marked "reserved" or "undefined".
Arduino SA reserves these for future definition and shall have no responsibility whatsoever for conflicts or incompatibilities arising from future changes to them. The product information on the Web Site or Materials is subject to change without notice.
Do not finalize a design with this info. ARDUINO and other Arduino brands and logos and Trademarks of Arduino SA. All Arduino SA Trademarks cannot be used without owner's formal permission.

Title: **ANALOG OUT**		
ID: AKX00032	Revision: V1.1	
Date: 2021-05-11 Time: 15:11:03	Sheet 13 of 19	
File: IO_ANALOG_OUT.SchDoc	Author: S.Navaretti	RevAuthor: S.Navaretti

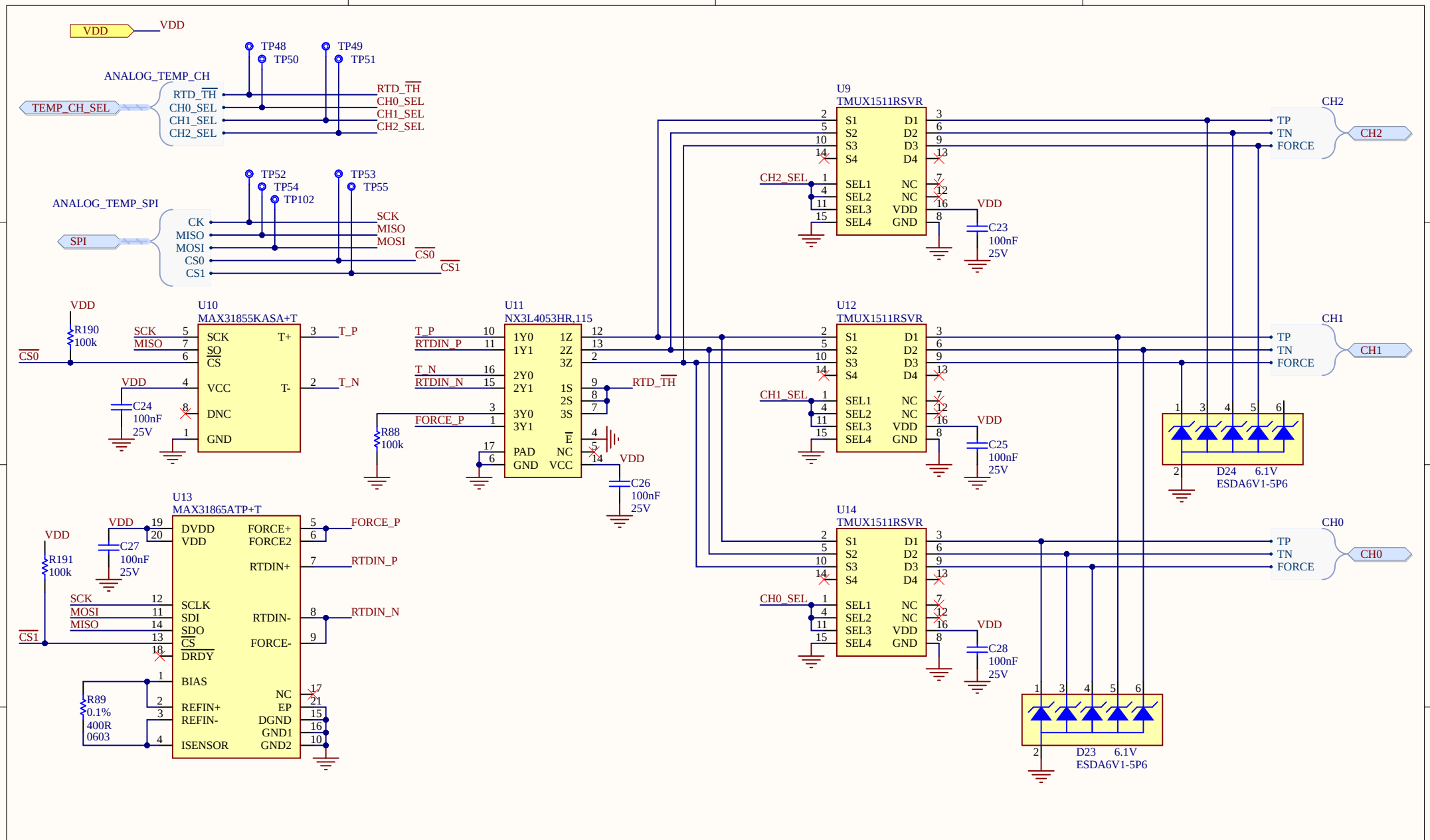

Reference Designs ARE PROVIDED "AS IS" AND "WITH ALL FAULTS. Arduino SA DISCLAIMS ALL OTHER WARRANTIES, EXPRESS OR IMPLIED, REGARDING PRODUCTS, INCLUDING BUT NOT LIMITED TO, ANY IMPLIED WARRANTIES OF MERCHANTABILITY OR FITNESS FOR A PARTICULAR PURPOSE.
Arduino SA may make changes to specifications and product descriptions at any time, without notice. The Customer must not rely on the absence or characteristics of any features or instructions marked "reserved" or "undefined". Arduino SA reserves these for future definition and shall have no responsibility whatsoever for conflicts or incompatibilities arising from future changes to them. The product information on the Web Site or Materials is subject to change without notice.
Do not finalize a design with this info. ARDUINO and other Arduino brands and logos and Trademarks of Arduino SA. All Arduino SA Trademarks cannot be used without owner's formal permission.

Title: **ANALOG TEMP**			
ID: AKX00032	Revision: V1.1		
Date: 2021-05-11	Time: 15:11:04	Sheet 14 of 19	
File: IO_ANALOG_TEMP.SchDoc	Author: S.Navaretti		RevAuthor: S.Navaretti

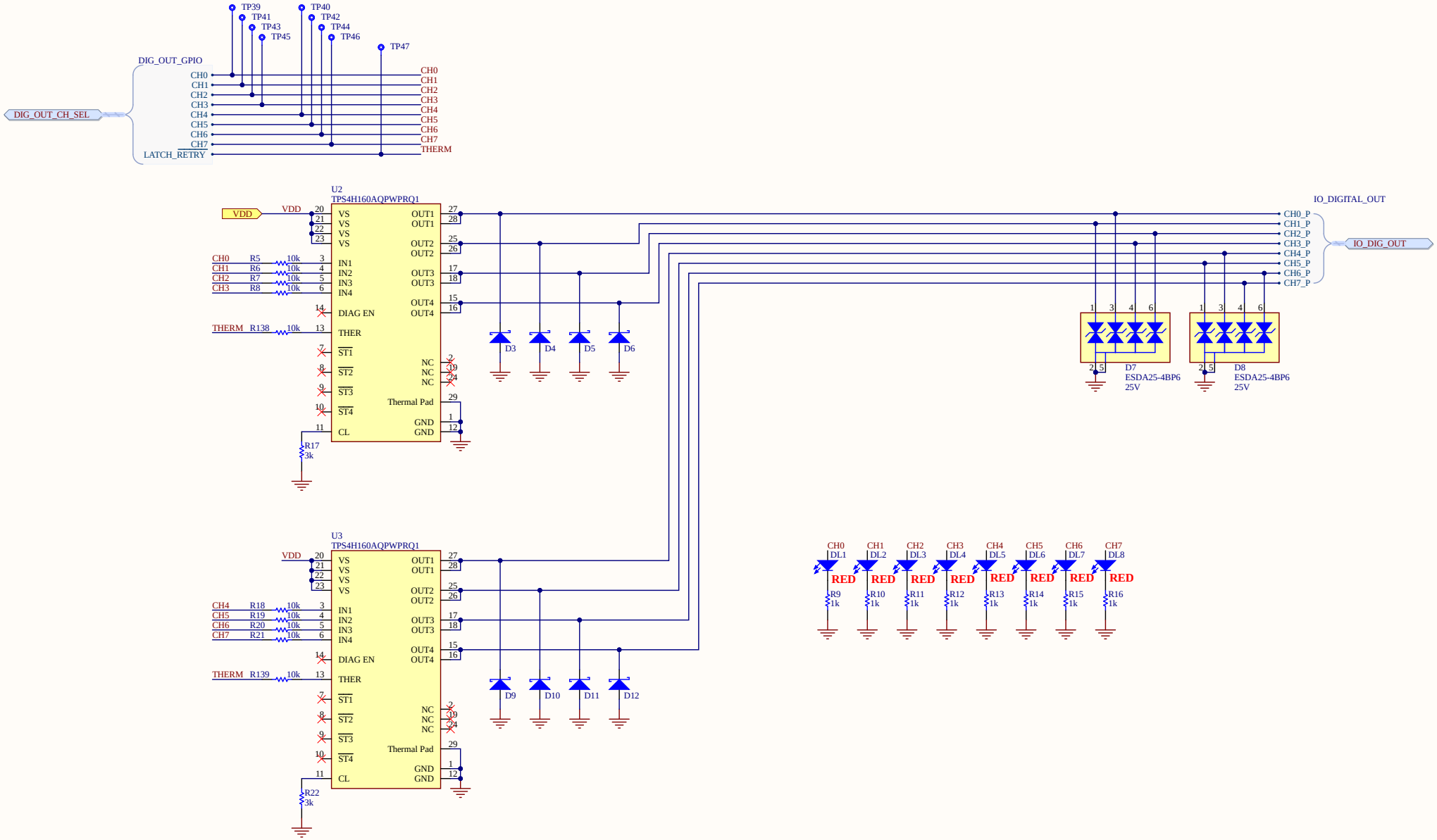

Reference Designs ARE PROVIDED "AS IS" AND "WITH ALL FAULTS. Arduino SA DISCLAIMS ALL OTHER WARRANTIES, EXPRESS OR IMPLIED, REGARDING PRODUCTS, INCLUDING BUT NOT LIMITED TO, ANY IMPLIED WARRANTIES OF MERCHANTABILITY OR FITNESS FOR A PARTICULAR PURPOSE.
Arduino SA may make changes to specifications and product descriptions at any time, without notice. The Customer must not rely on the absence or characteristics of any features or instructions marked "reserved" or "undefined".
Arduino SA reserves these for future definition and shall have no responsibility whatsoever for conflicts or incompatibilities arising from future changes to them. The product information on the Web Site or Materials is subject to change without notice.
Do not finalize a design with this info. ARDUINO and other Arduino brands and logos and Trademarks of Arduino SA. All Arduino SA Trademarks cannot be used without owner's formal permission.

Title: **DIGITAL OUT**			
ID: AKX00032	Revision: V1.1		
Date: 2021-05-11 Time: 15:11:04	Sheet 15 of 19		
File: IO_DIGITAL_OUT.SchDoc	Author: S.Navaretti	RevAuthor: S.Navaretti	

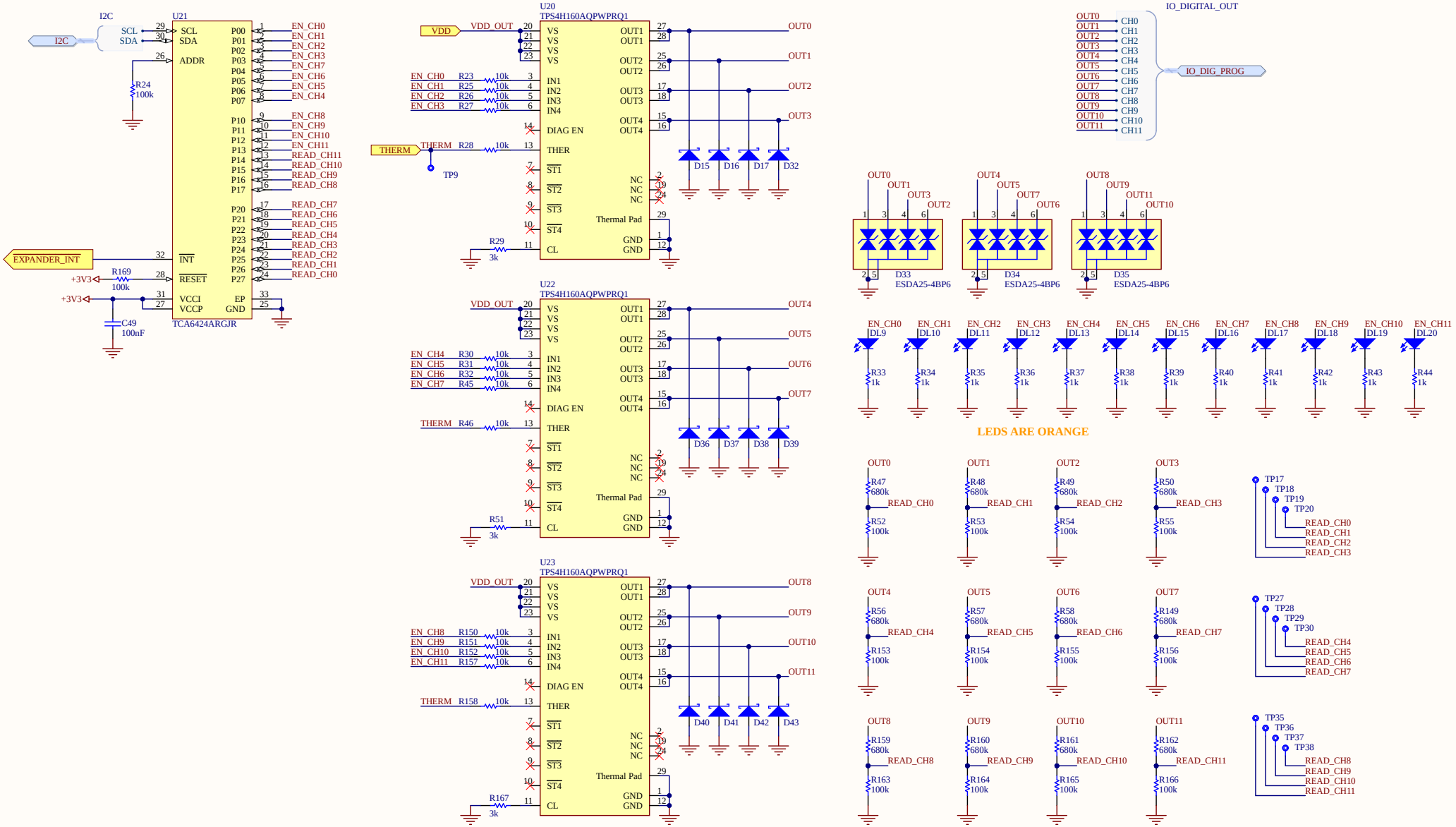

Reference Designs ARE PROVIDED "AS IS" AND "WITH ALL FAULTS. Arduino SA DISCLAIMS ALL OTHER WARRANTIES, EXPRESS OR IMPLIED, REGARDING PRODUCTS, INCLUDING BUT NOT LIMITED TO, ANY IMPLIED WARRANTIES OF MERCHANTABILITY OR FITNESS FOR A PARTICULAR PURPOSE.
Arduino SA may make changes to specifications and product descriptions at any time, without notice. The Customer must not rely on the absence or characteristics of any features or instructions marked "reserved" or "undefined".
Arduino SA reserves these for future definition and shall have no responsibility whatsoever for conflicts or incompatibilities arising from future changes to them. The product information on the Web Site or Materials is subject to change without notice.
Do not finalize a design with this info. ARDUINO and other Arduino brands and logos and Trademarks of Arduino SA. All Arduino SA Trademarks cannot be used without owner's formal permission.

Title: **DIGITAL PROGRAMMABLE**			
ID: AKX00032	Revision: V1.1		
Date: 2021-05-11	Time: 15:11:05	Sheet 16 of 19	
File: IO_DIGITAL_PROGRAMMABLE.SchDoc		Author: S.Navaretti	RevAuthor: S.Navaretti

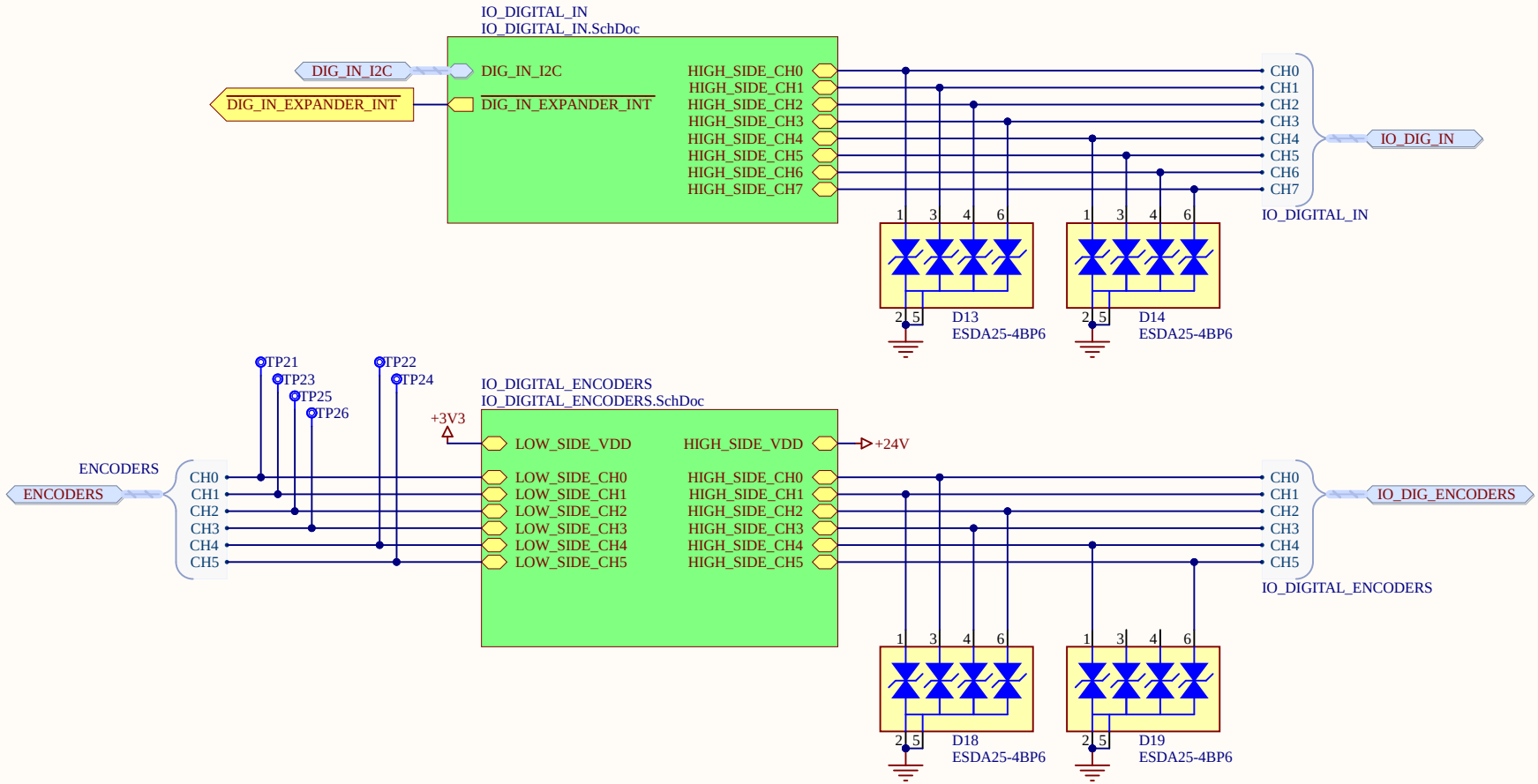

Reference Designs ARE PROVIDED "AS IS" AND "WITH ALL FAULTS. Arduino SA DISCLAIMS ALL OTHER WARRANTIES, EXPRESS OR IMPLIED, REGARDING PRODUCTS, INCLUDING BUT NOT LIMITED TO, ANY IMPLIED WARRANTIES OF MERCHANTABILITY OR FITNESS FOR A PARTICULAR PURPOSE.
Arduino SA may make changes to specifications and product descriptions at any time, without notice. The Customer must not rely on the absence or characteristics of any features or instructions marked "reserved" or "undefined". Arduino SA reserves these for future definition and shall have no responsibility whatsoever for conflicts or incompatibilities arising from future changes to them. The product information on the Web Site or Materials is subject to change without notice.
Do not finalize a design with this info. ARDUINO and other Arduino brands and logos and Trademarks of Arduino SA. All Arduino SA Trademarks cannot be used without owner's formal permission.

Title: **TOP DIGITAL IN / ENCODERS**			
ID: AKX00032	Revision: V1.1		
Date: 2021-05-11	Time: 15:11:06	Sheet 17 of 19	
File: IO_DIGITAL.SchDoc	Author: S.Navaretti		RevAuthor: S.Navaretti

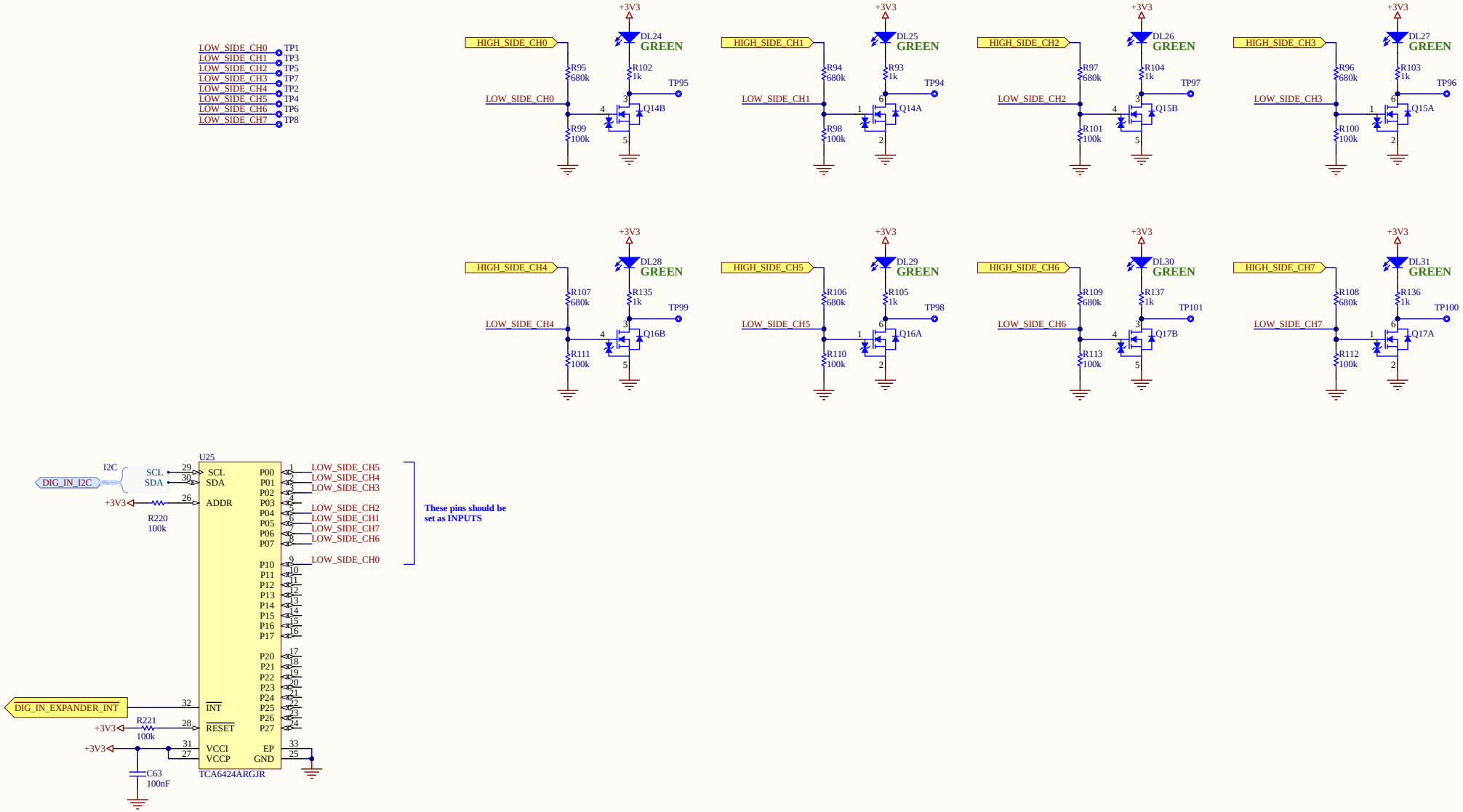

Reference Designs ARE PROVIDED "AS IS" AND "WITH ALL FAULTS. Arduino SA DISCLAIMS ALL OTHER WARRANTIES, EXPRESS OR IMPLIED, REGARDING PRODUCTS, INCLUDING BUT NOT LIMITED TO, ANY IMPLIED WARRANTIES OF MERCHANTABILITY OR FITNESS FOR A PARTICULAR PURPOSE.
Arduino SA may make changes to specifications and product descriptions at any time, without notice. The Customer must not rely on the absence or characteristics of any features or instructions marked "reserved" or "undefined".
Arduino SA reserves these for future definition and shall have no responsibility whatsoever for conflicts or incompatibilities arising from future changes to them. The product information on the Web Site or Materials is subject to change without notice.
Do not finalize a design with this info. ARDUINO and other Arduino brands and logos and Trademarks of Arduino SA. All Arduino SA Trademarks cannot be used without owner's formal permission.

Title: **DIGITAL IN**		
ID: AKX00032	Revision: V1.1	
Date: 2021-05-11 Time: 15:11:07	Sheet 18 of 19	
File: IO_DIGITAL_IN.SchDoc	Author: S.Navaretti	RevAuthor: S.Navaretti

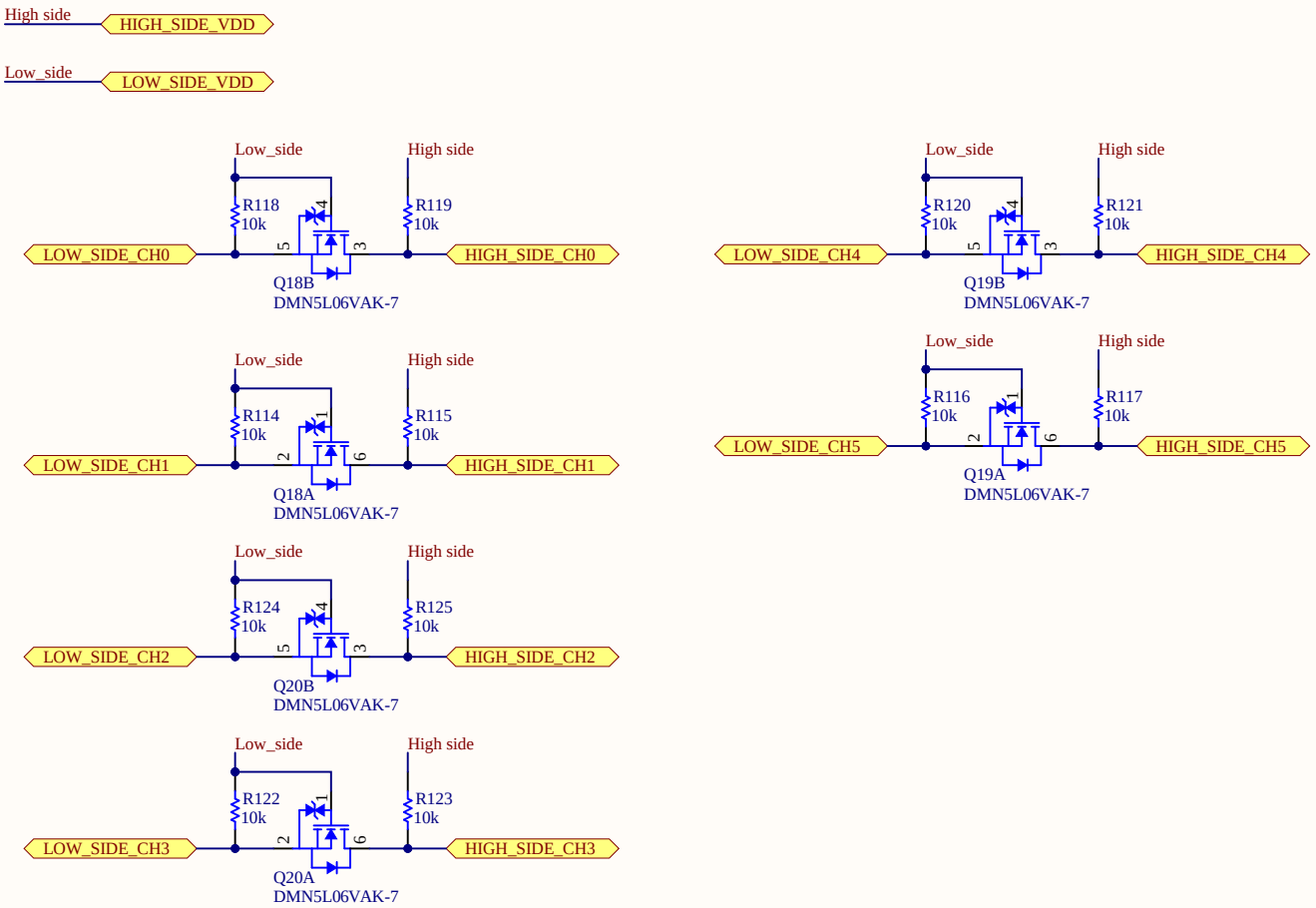

Reference Designs ARE PROVIDED "AS IS" AND "WITH ALL FAULTS. Arduino SA DISCLAIMS ALL OTHER WARRANTIES, EXPRESS OR IMPLIED, REGARDING PRODUCTS, INCLUDING BUT NOT LIMITED TO, ANY IMPLIED WARRANTIES OF MERCHANTABILITY OR FITNESS FOR A PARTICULAR PURPOSE.
Arduino SA may make changes to specifications and product descriptions at any time, without notice. The Customer must not rely on the absence or characteristics of any features or instructions marked "reserved" or "undefined". Arduino SA reserves these for future definition and shall have no responsibility whatsoever for conflicts or incompatibilities arising from future changes to them. The product information on the Web Site or Materials is subject to change without notice.
Do not finalize a design with this info. ARDUINO and other Arduino brands and logos and Trademarks of Arduino SA. All Arduino SA Trademarks cannot be used without owner's formal permission.

Title: **DIGITAL ENCODERS**		
ID: AKX00032	Revision: V1.1	
Date: 2021-05-11 Time: 15:11:08	Sheet 19 of 19	
File: IO_DIGITAL_ENCODERS.SchDoc	Author: S.Navaretti	RevAuthor: S.Navaretti