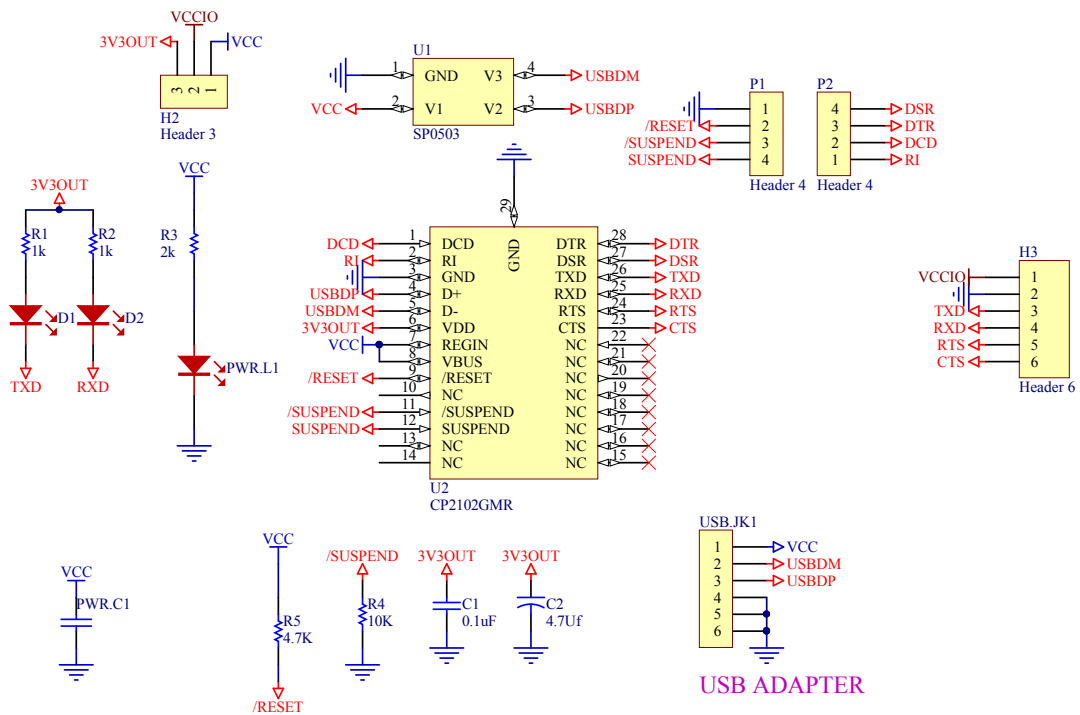

Title		
Size B	Number	Revision
Date: 2013/7/13	Sheet of	
File: E:\PCB\MODULE\CP2102\CP2102 Board.Sch	Drawn By:	